Project : MT6889, LPDDR4X (SBS)
REF_SCH TOP LEVEL

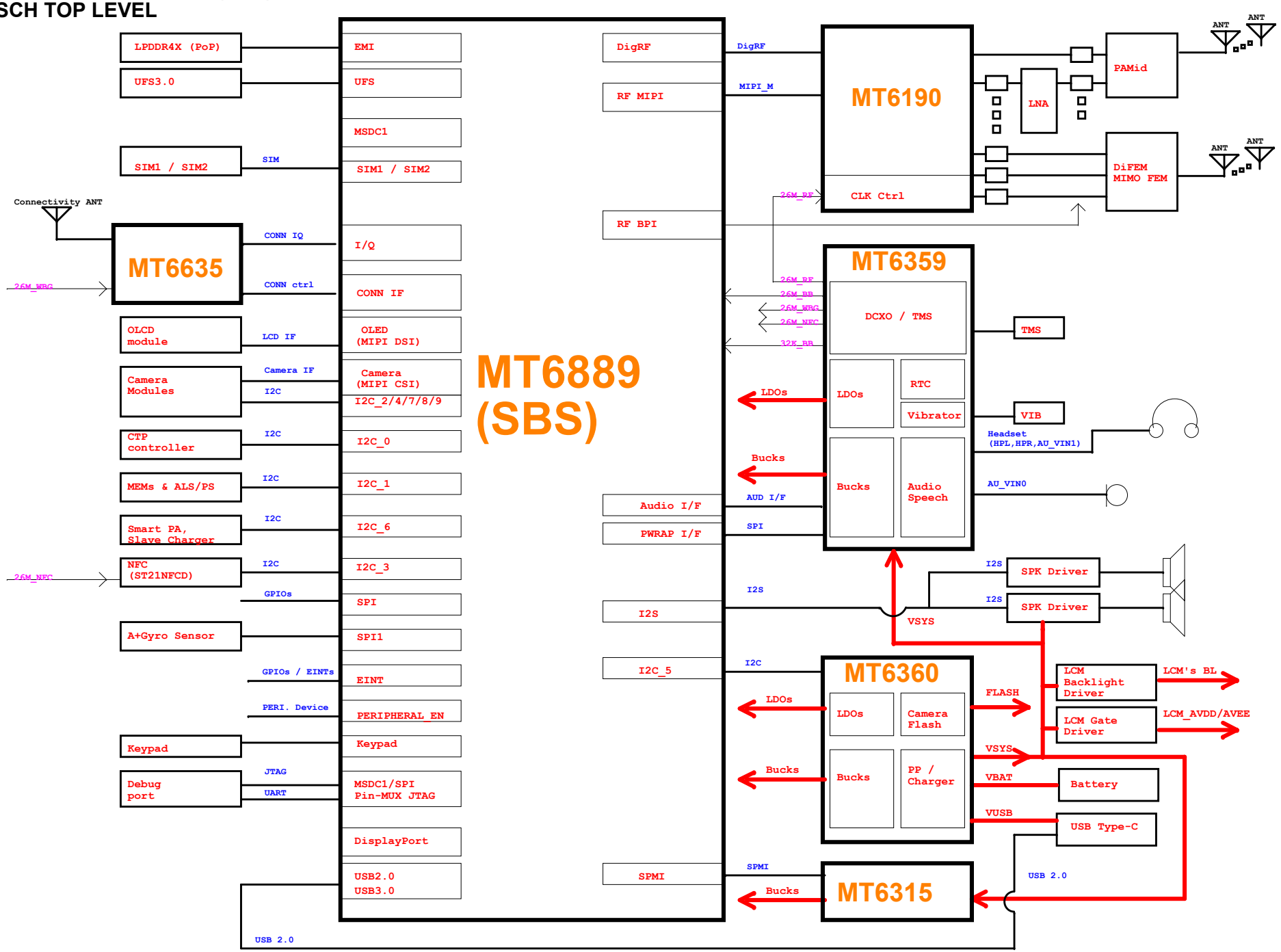

MI PHONE			
Title	MT6873_5GA		
Size C	Document Number Diagram		Rev P0
Date: Monday, March 22, 2021	Sheet 1 of 73		

ANT4 LMHB DRX

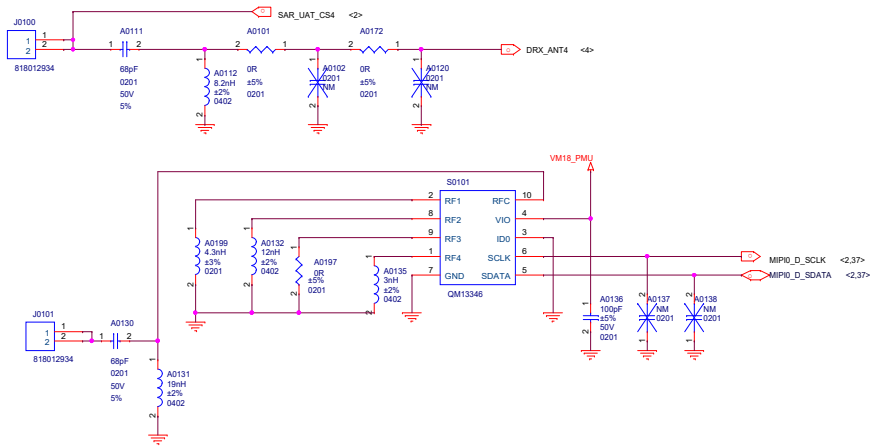

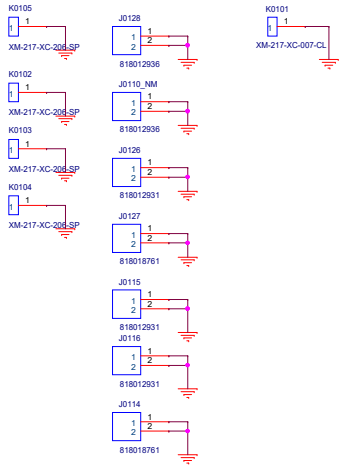

ANT7_WIFI_MIMO

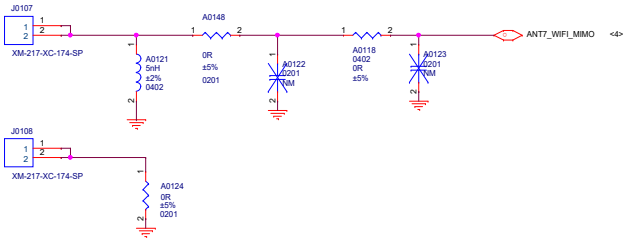

ANT5 N77+N78

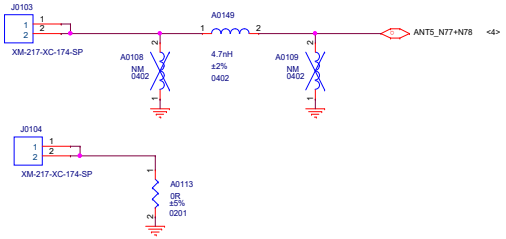

ANT3_MHB+N77+N78

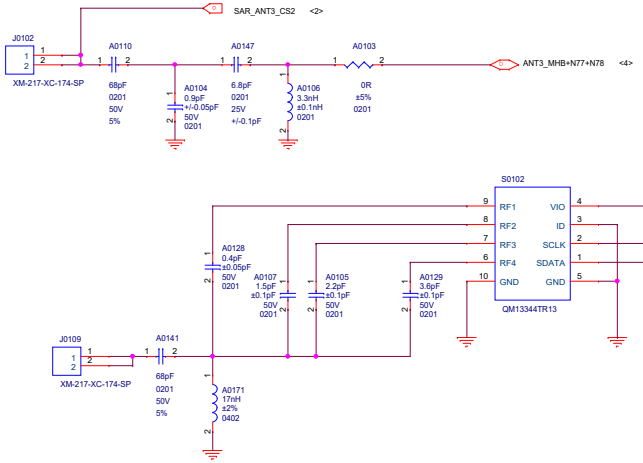

ANT6_Combo（GPSL1+WiFi）

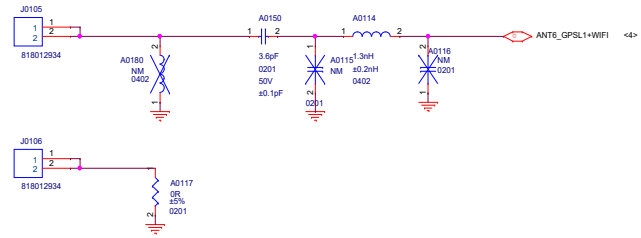

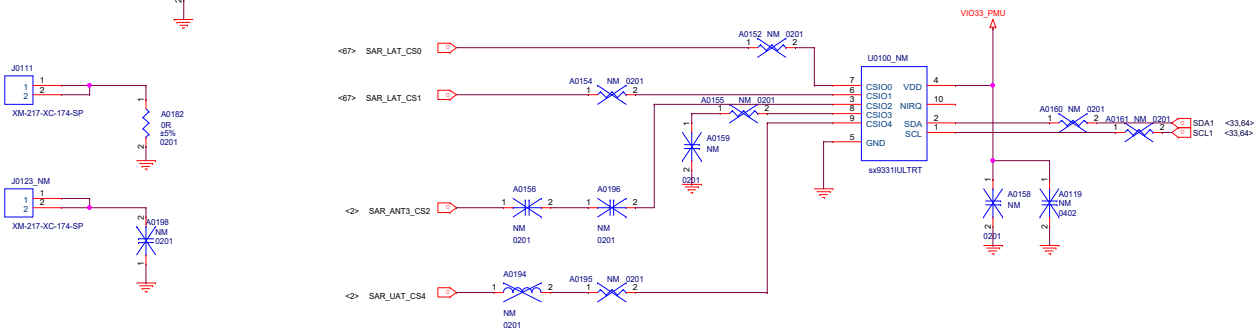

Title	G7A MAIN
Size A2	Document Number <Doc>
Date: Monday, March 22, 2021	Sheet 2 of 72

Title	J11 MAIN
Size A3	Document Number <Doc>
Date: Monday, March 22, 2021	Sheet

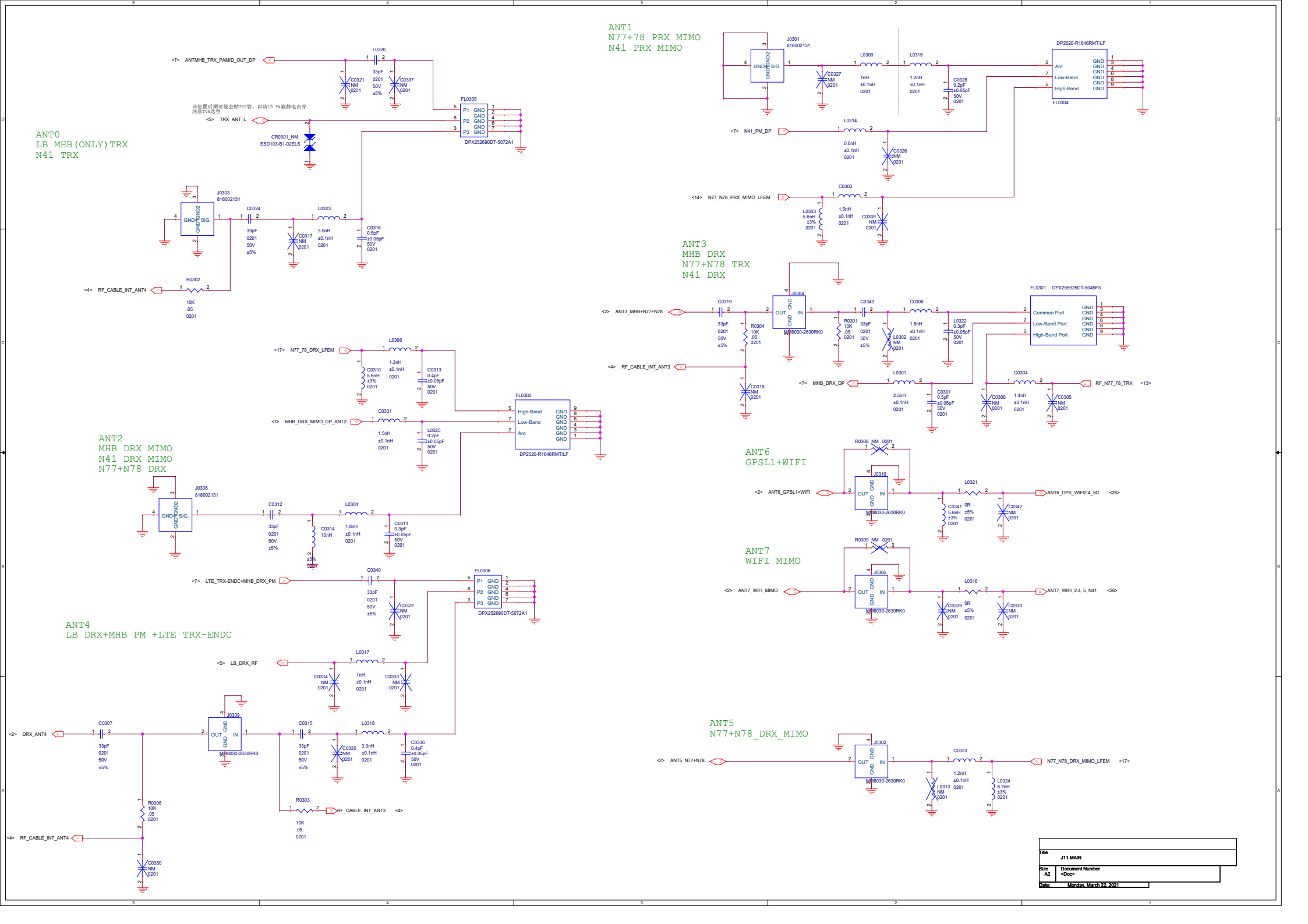
ANT0
LB MHB(ONLY)TRX
N41 TRX
ANT1
N77+78 PRX MIMO
N41 PRX MIMO
ANT2
MHB DRX MIMO
N41 DRX MIMO
N77+N78 DRX
ANT3
MHB DRX
N77+N78 TRX
N41 DRX
ANT4
LB DRX+MHB PM +LTE TRX-ENDC
ANT5
N77+N78_DRX_MIMO
ANT6
GPSL1+WIFI
ANT7
WIFI MIMO
<7> ANTMHB_TRX_PAMID_OUT_DP
<5> TRX_ANT_L
这位置后期可能会贴TVS管，以防LB PA被静电击穿
注意TVS选型
CR0301_NM
ESD103-B1-02ELS
FL0305
DPX252690DT-5072A1
J0303
818002131
<4> RF_CABLE_INT_ANT4
<14> N77_N78_PRX_MIMO_LFEM
<2> ANT3_MHB+N77+N78
<4> RF_CABLE_INT_ANT3
<7> MHB_DRX_DP
RF_N77_78_TRX
<13>
FL0301
DPX255925DT-5045F3
Common Port
Low-Band Port
High-Band Port
<17> N77_78_DRX_LFEM
<7> MHB_DRX_MIMO_DP_ANT2
FL0302
DP2520-R1646RMT/LF
High-Band
Low-Band
Ant
J0306
818002131
<7> LTE_TRX-ENDC+MHB_DRX_PM
FL0306
DPX252690DT-5072A1
<5> LB_DRX_RF
<2> DRX_ANT4
<2> ANT6_GPSL1+WIFI
ANT6_GPS_WIFI2.4_5G
<26>
<2> ANT7_WIFI_MIMO
ANT7_WIFI_2.4_5_N41
<26>
<2> ANT5_N77+N78
N77_N78_DRX_MIMO_LFEM
<17>
J0301
818002131
FL0304
DP2520-R1646RMT/LF
Ant
Low-Band
High-Band
<7> N41_PM_DP
J0304
J0309
J0310
J0305
J0302
MM8030-2630RK0
Title
J11 MAIN
Size
A2
Document Number
<Doc>
Date:
Monday, March 22, 2021

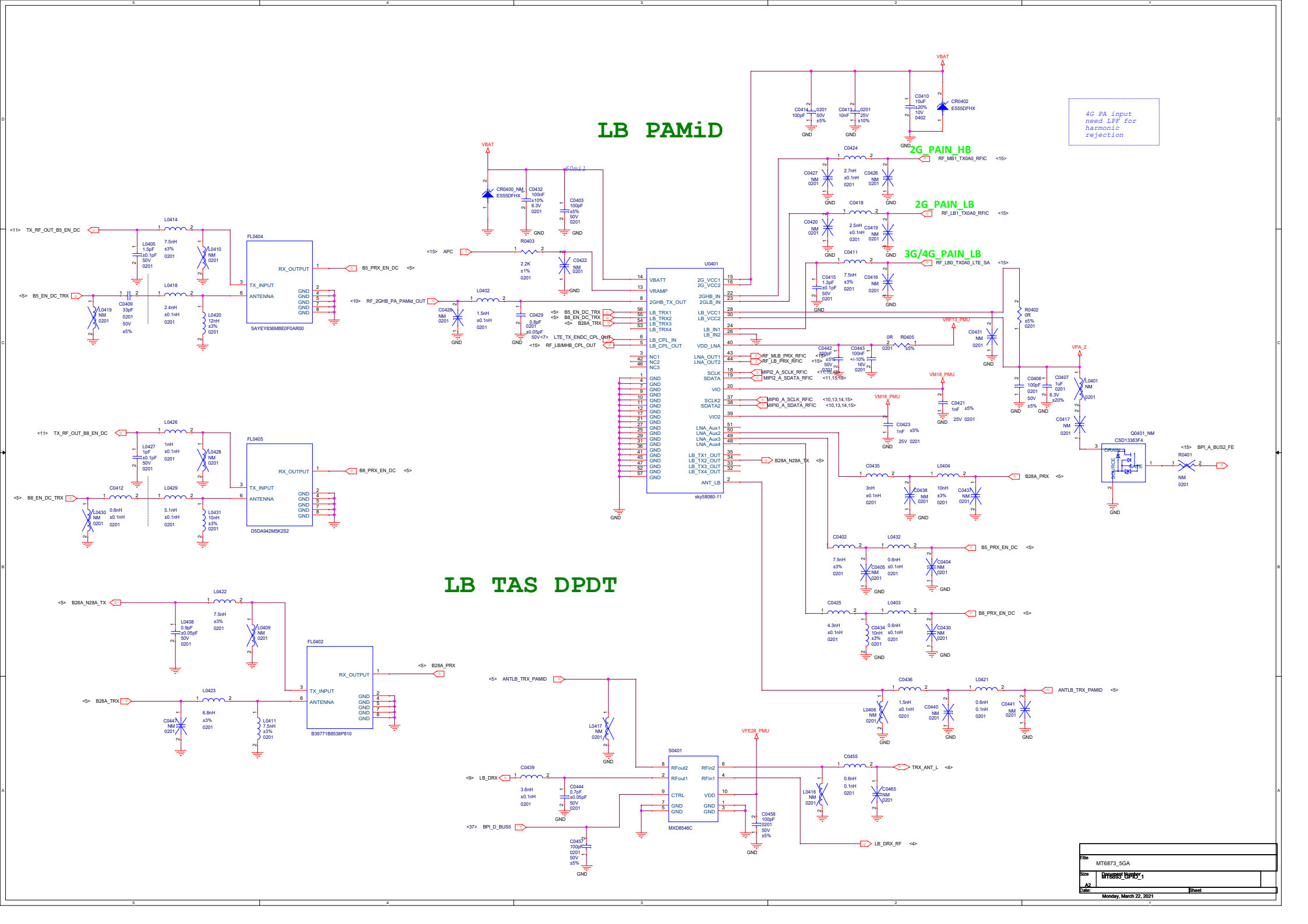

Title	MT6873_5GA
Size	A2
Document Number	MT6873_5GPC_1
Date:	Monday, March 22, 2021
Sheet	

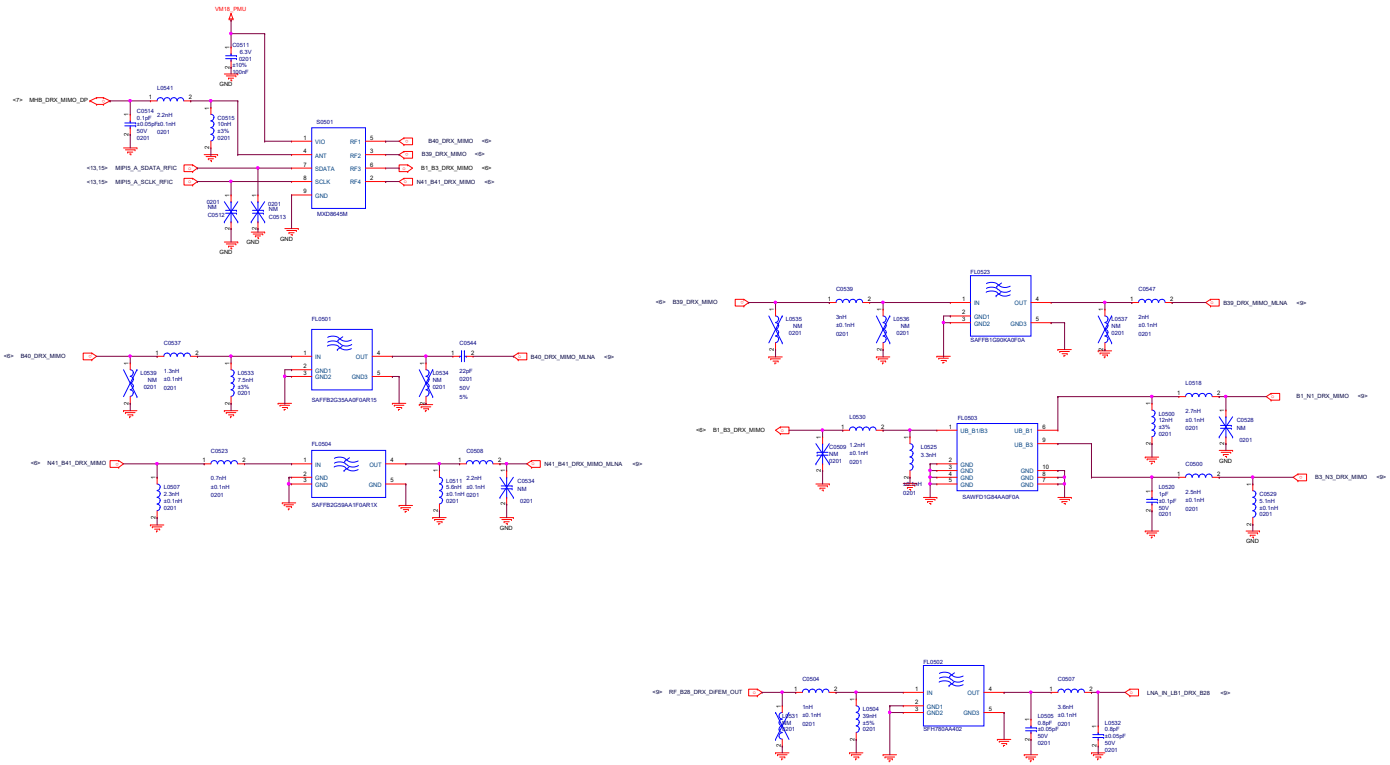

MI PHONE			
File: MT6983_5GL			
Size A1	Document Number DRX		Rev P0
Date: Monday, March 22, 2021	Sheet 6 of 73		

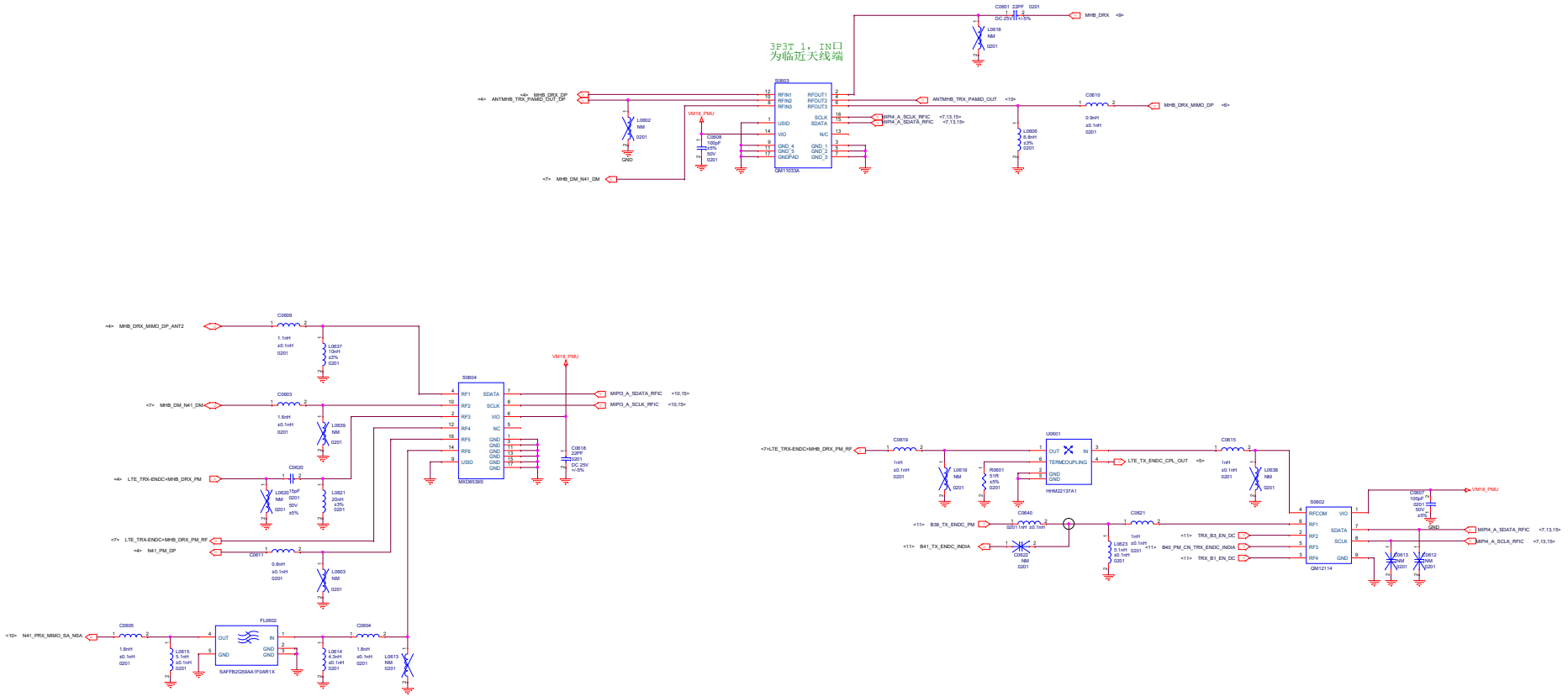

MI PHONE			
File: MT6983_SCL			
Size: A1	Document Number: SWITCH		Rev: P0
Date: Monday, March 22, 2021	Sheet 7 of 73		

Title	
Size A2	Document Number MT6893_PWR3
Date: Monday, March 22, 2021	Sheet

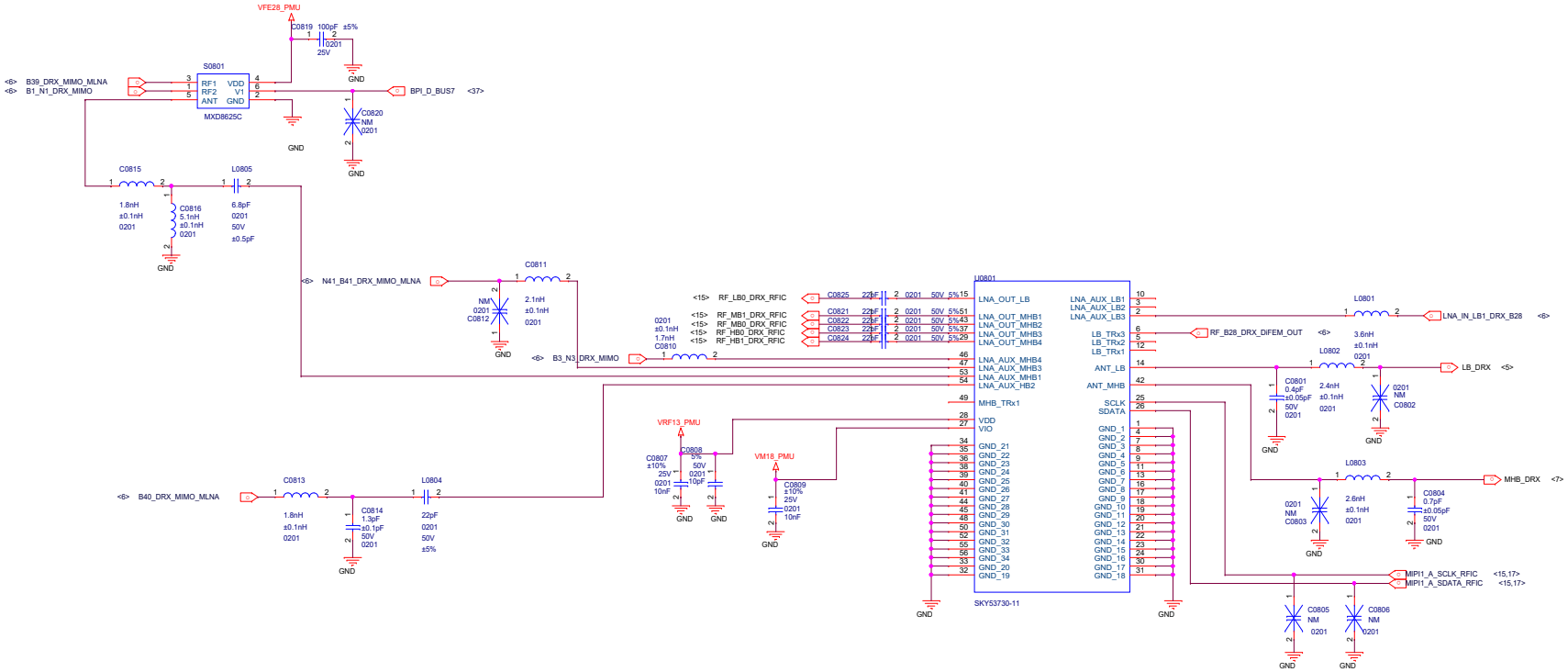

MI PHONE			
Title	MT6883_5GL		
Size A2	Document Number DRX_LNA		Rev P0
Date: Monday, March 22, 2021	Sheet 9 of 73		

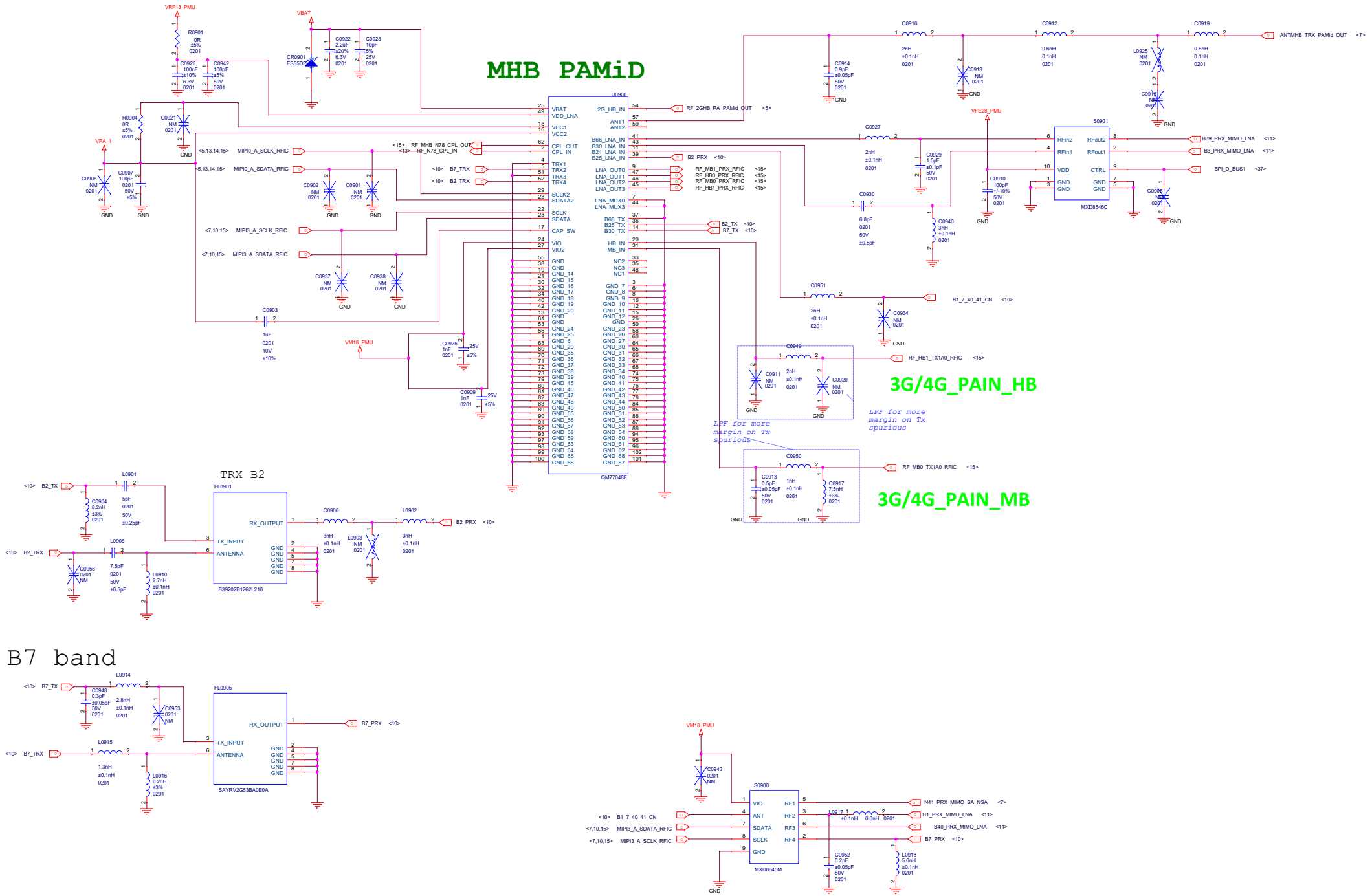

MI PHONE		
Title	MT6883_5GL	
Size A2	Document Number PA_4G	Rev P0
Date: Monday, March 22, 2021	Sheet 10 of 73	

MMMB PA

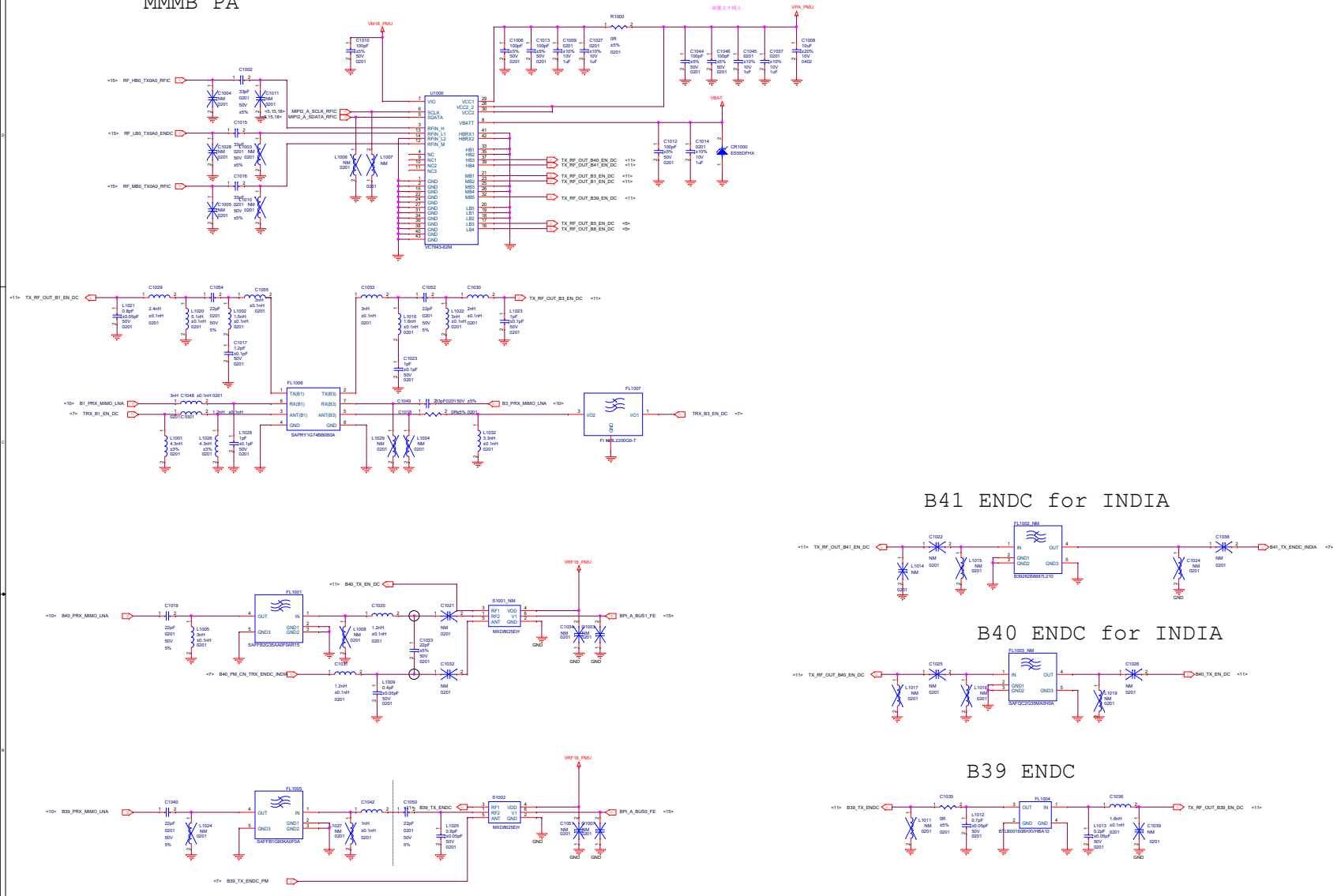

MI PHONE		
File: MT6983_SCL		
Size: A1	Document Number: PA_SC_N41	Rev: P0
Date: Monday, March 22, 2021	Sheet 11 of 23	

NR N77/N78 PAMID

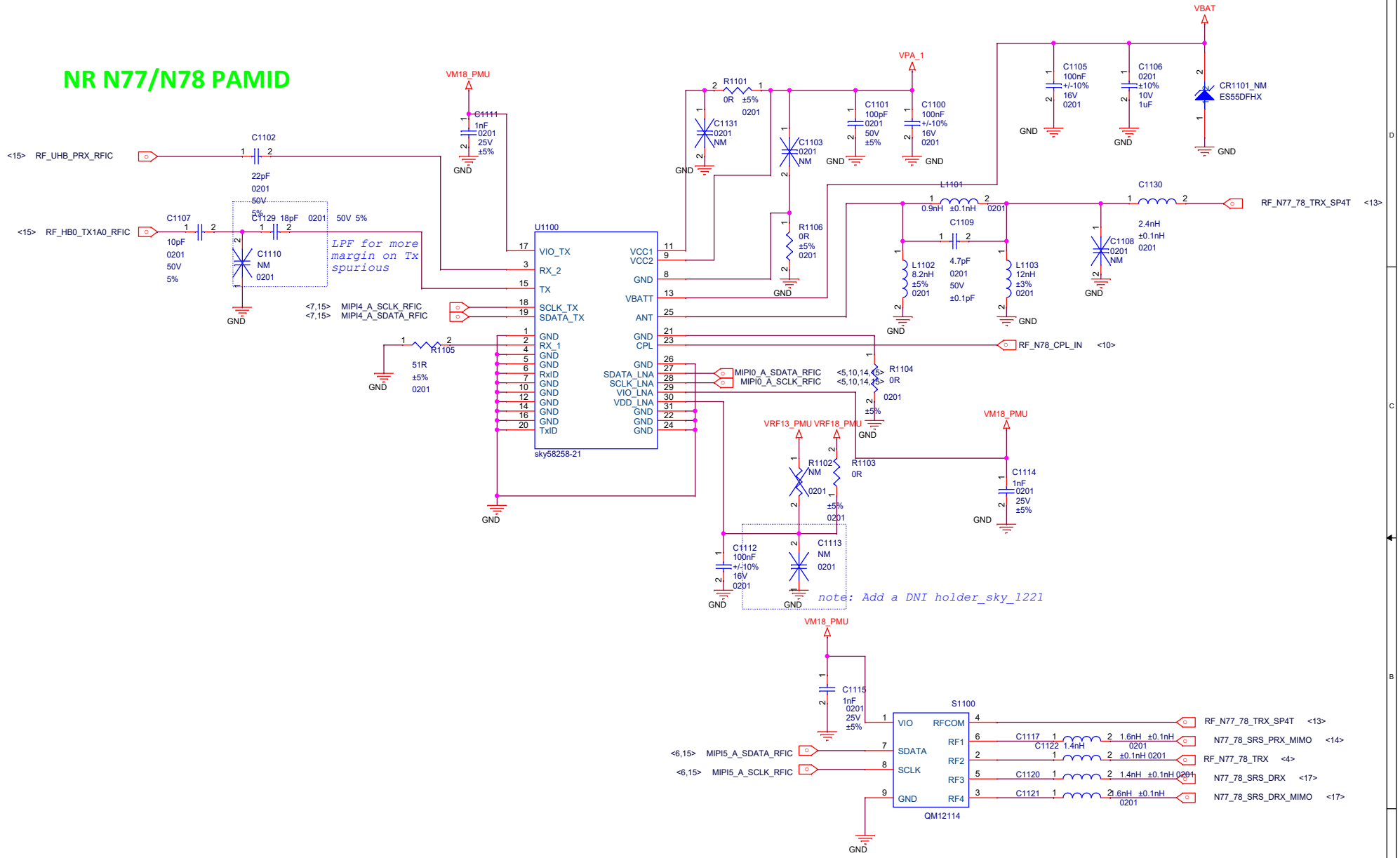

MI PHONE		
Title: MT6883_5GL		
Size: A3	Document Number: PA_5G_TX0_N78_N79	Rev: P0
Date: Monday, March 22, 2021	Sheet 13 of 73	

NR N77/N78 PRx-MIMO LFEM

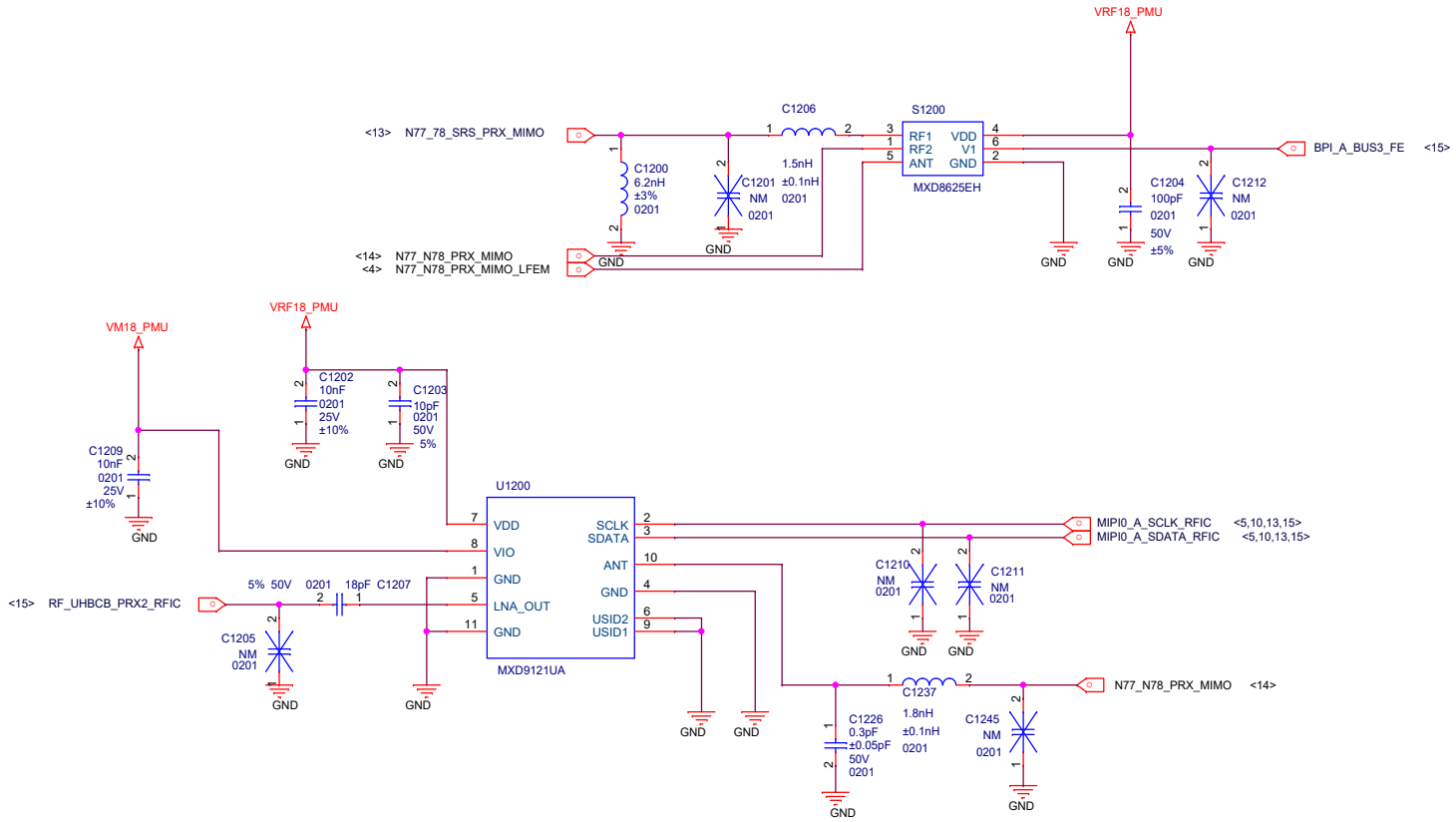

MI PHONE		
Title	MT6883_5GL	
Size A3	Document Number	Rev
Date: Monday, March 22, 2021	Sheet 14 of 73	

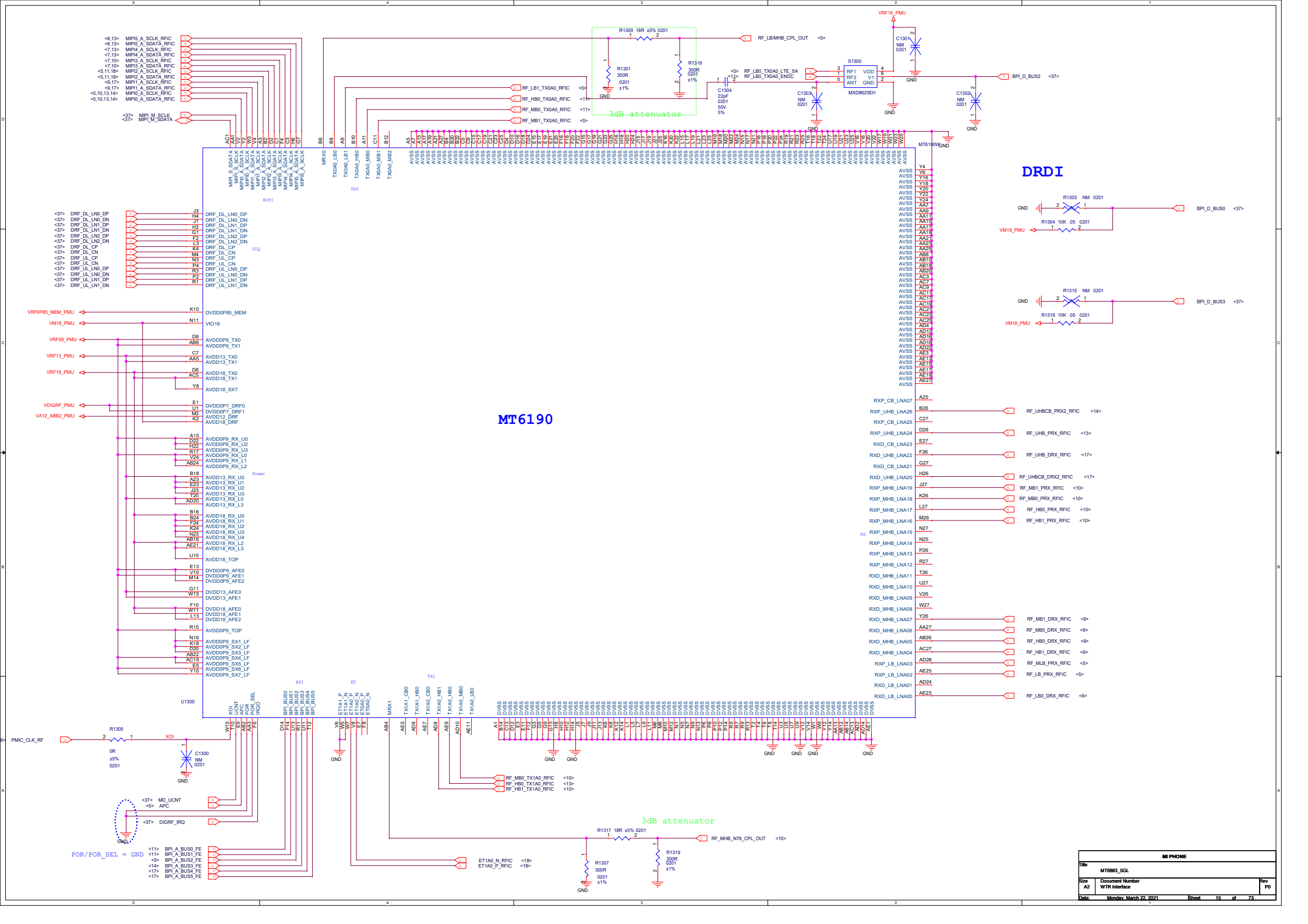
MT6190
DRDI
3dB attenuator
3dB attenuator
U1300
S1300
MXD8625EH
R1309 18R ±5% 0201
R1301 300R 0201 ±1%
R1318 300R 0201 ±1%
C1304 22pF 0201 50V 5%
C1301 NM 0201
C1303 NM 0201
C1302 NM 0201
R1303 NM 0201
R1304 10K .05 0201
R1315 NM 0201
R1316 10K .05 0201
R1305 0R ±5% 0201
C1300 NM 0201
R1317 18R ±5% 0201
R1307 300R 0201 ±1%
R1319 300R 0201 ±1%
VRF18_PMU
VM18_PMU
VRF0P85_MEM_PMU
VRF09_PMU
VRF13_PMU
VDIGRF_PMU
VA12_ABB2_PMU
RF_LB/MHB_CPL_OUT
RF_LB_TX0A0_LTE_SA
RF_LB_TX0A0_ENDC
BPI_D_BUS2
BPI_D_BUS0
BPI_D_BUS3
RF_UHBCB_PRX2_RFIC
RF_UHB_PRX_RFIC
RF_UHB_DRX_RFIC
RF_UHBCB_DRX2_RFIC
RF_MB1_PRX_RFIC
RF_MB0_PRX_RFIC
RF_HB0_PRX_RFIC
RF_HB1_PRX_RFIC
RF_MB1_DRX_RFIC
RF_MB0_DRX_RFIC
RF_HB0_DRX_RFIC
RF_HB1_DRX_RFIC
RF_MLB_PRX_RFIC
RF_LB_PRX_RFIC
RF_LB0_DRX_RFIC
RF_LB1_TX0A0_RFIC
RF_HB0_TX0A0_RFIC
RF_MB0_TX0A0_RFIC
RF_MB1_TX0A0_RFIC
RF_MB0_TX1A0_RFIC
RF_HB0_TX1A0_RFIC
RF_HB1_TX1A0_RFIC
RF_MHB_N78_CPL_OUT
ET1A0_N_RFIC
ET1A0_P_RFIC
PMIC_CLK_RF
XOI
MIPI_M_SCLK
MIPI_M_SDATA
MD_UCNT
APC
DIGRF_IRQ
POR/POR_SEL = GND
BPI_A_BUS0_FE
BPI_A_BUS1_FE
BPI_A_BUS2_FE
BPI_A_BUS3_FE
BPI_A_BUS4_FE
BPI_A_BUS5_FE
MIPI
DIQ
TX0
Power
BPI
ET
TX1
RX
MI PHONE
Title
MT6883_5GL
Size A2
Document Number WTR Interface
Rev P0
Date: Monday, March 22, 2021
Sheet 15 of 73

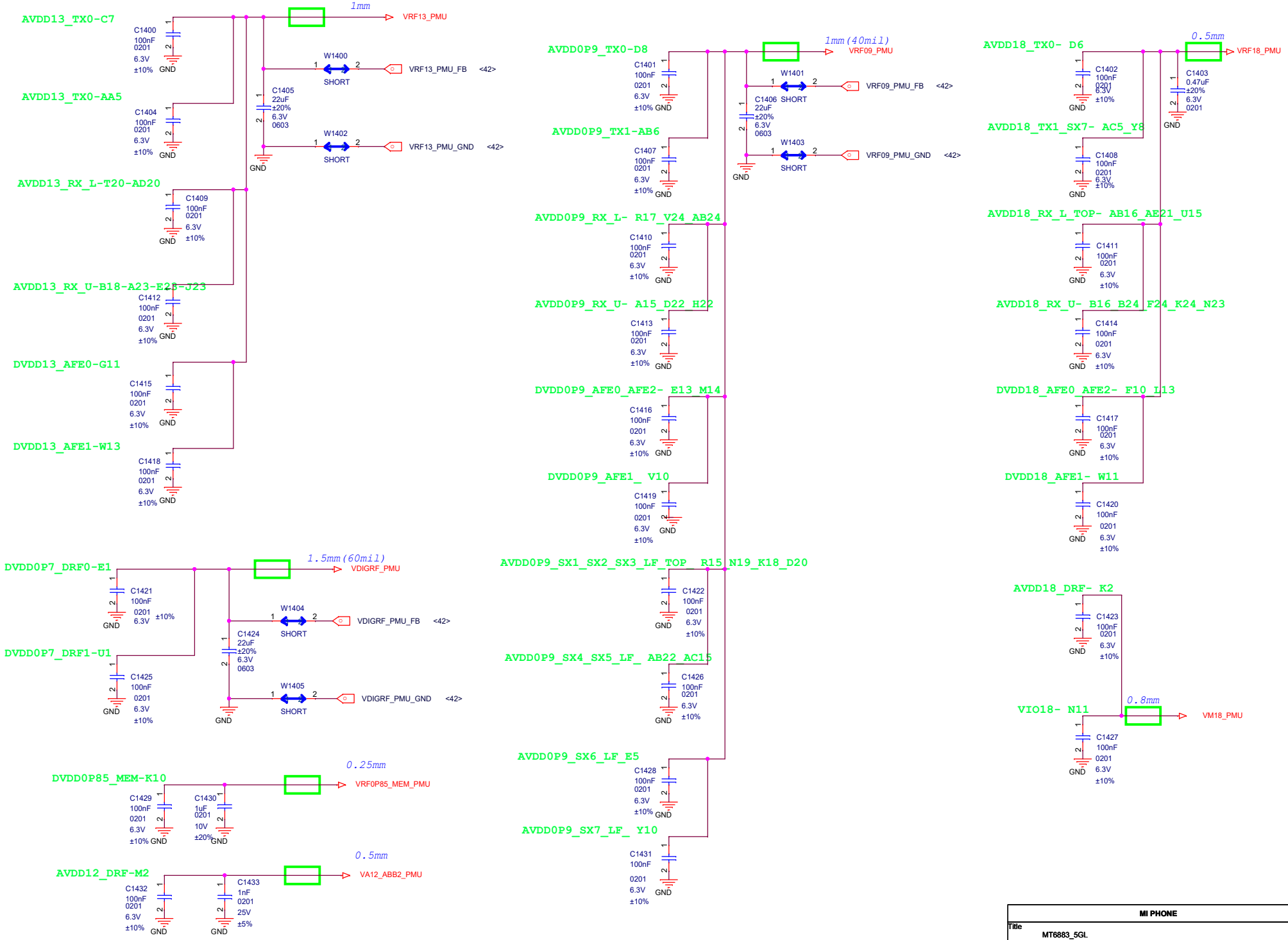
AVDD13_TX0-C7
C1400 100nF 0201 6.3V ±10%
1mm
VRF13_PMU
W1400 SHORT
VRF13_PMU_FB <42>
C1405 22uF ±20% 6.3V 0603
W1402 SHORT
VRF13_PMU_GND <42>
AVDD13_TX0-AA5
C1404 100nF 0201 6.3V ±10%
AVDD13_RX_L-T20-AD20
C1409 100nF 0201 6.3V ±10%
AVDD13_RX_U-B18-A23-E23-J23
C1412 100nF 0201 6.3V ±10%
DVDD13_AFE0-G11
C1415 100nF 0201 6.3V ±10%
DVDD13_AFE1-W13
C1418 100nF 0201 6.3V ±10%
GND
AVDD0P9_TX0-D8
C1401 100nF 0201 6.3V ±10%
1mm(40mil)
VRF09_PMU
W1401 SHORT
VRF09_PMU_FB <42>
C1406 22uF ±20% 6.3V 0603
W1403 SHORT
VRF09_PMU_GND <42>
AVDD0P9_TX1-AB6
C1407 100nF 0201 6.3V ±10%
AVDD0P9_RX_L- R17_V24_AB24
C1410 100nF 0201 6.3V ±10%
AVDD0P9_RX_U- A15_D22_H22
C1413 100nF 0201 6.3V ±10%
DVDD0P9_AFE0_AFE2- E13_M14
C1416 100nF 0201 6.3V ±10%
DVDD0P9_AFE1_ V10
C1419 100nF 0201 6.3V ±10%
AVDD18_TX0- D6
0.5mm
VRF18_PMU
C1402 100nF 0201 6.3V ±10%
C1403 0.47uF ±20% 6.3V 0201
AVDD18_TX1_SX7- AC5_Y8
C1408 100nF 0201 6.3V ±10%
AVDD18_RX_L_TOP- AB16_AE21_U15
C1411 100nF 0201 6.3V ±10%
AVDD18_RX_U- B16_B24_F24_K24_N23
C1414 100nF 0201 6.3V ±10%
DVDD18_AFE0_AFE2- F10_L13
C1417 100nF 0201 6.3V ±10%
DVDD18_AFE1- W11
C1420 100nF 0201 6.3V ±10%
DVDD0P7_DRF0-E1
C1421 100nF 0201 6.3V ±10%
1.5mm(60mil)
VDIGRF_PMU
W1404 SHORT
VDIGRF_PMU_FB <42>
C1424 22uF ±20% 6.3V 0603
W1405 SHORT
VDIGRF_PMU_GND <42>
DVDD0P7_DRF1-U1
C1425 100nF 0201 6.3V ±10%
AVDD0P9_SX1_SX2_SX3_LF_TOP_ R15_N19_K18_D20
C1422 100nF 0201 6.3V ±10%
AVDD0P9_SX4_SX5_LF_ AB22_AC15
C1426 100nF 0201 6.3V ±10%
AVDD18_DRF- K2
C1423 100nF 0201 6.3V ±10%
VIO18- N11
0.8mm
VM18_PMU
C1427 100nF 0201 6.3V ±10%
DVDD0P85_MEM-K10
C1429 100nF 0201 6.3V ±10%
C1430 1uF 0201 10V ±20%
0.25mm
VRF0P85_MEM_PMU
AVDD0P9_SX6_LF_E5
C1428 100nF 0201 6.3V ±10%
AVDD0P9_SX7_LF_ Y10
C1431 100nF 0201 6.3V ±10%
AVDD12_DRF-M2
C1432 100nF 0201 6.3V ±10%
C1433 1nF 0201 25V ±5%
0.5mm
VA12_ABB2_PMU
MI PHONE
Title
MT6883_5GL
Size A3
Document Number WTR PWR
Rev P0
Date: Monday, March 22, 2021
Sheet 16 of 73

NR N77/N78/N79 DRx-LFEM

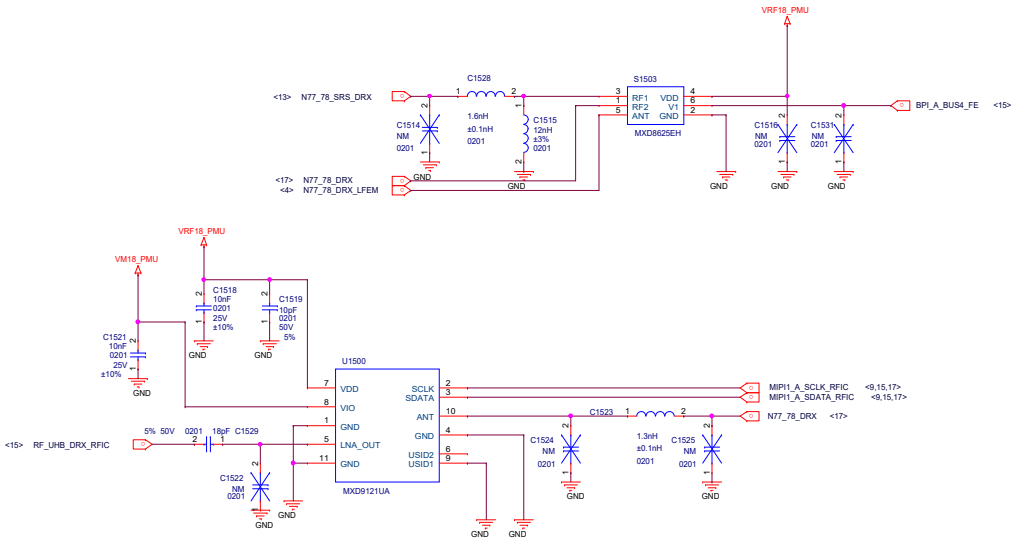

NR N77/N78/N79 DRx_MIMO-LFEM

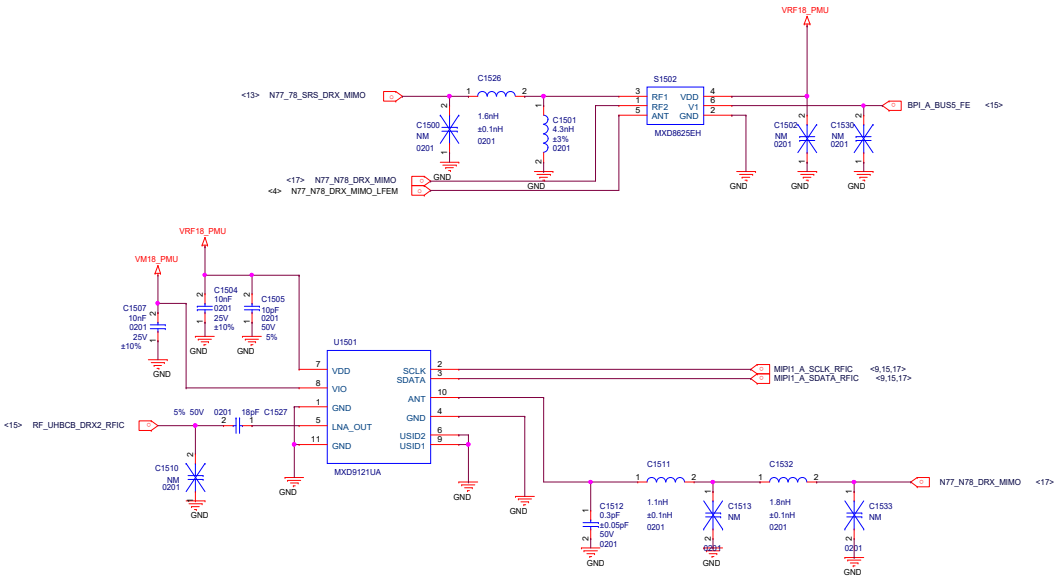

MI PHONE		
Title: MT6883_5GL		
Size: A2	Document Number: 5G_MIMO_LNA	Rev: P0
Date: Monday, March 22, 2021	Sheet 17 of 73	

NR_PAMid_n41_SatPA_ET1_NR1/ET Ref design

L+MH_PAMIid_ET

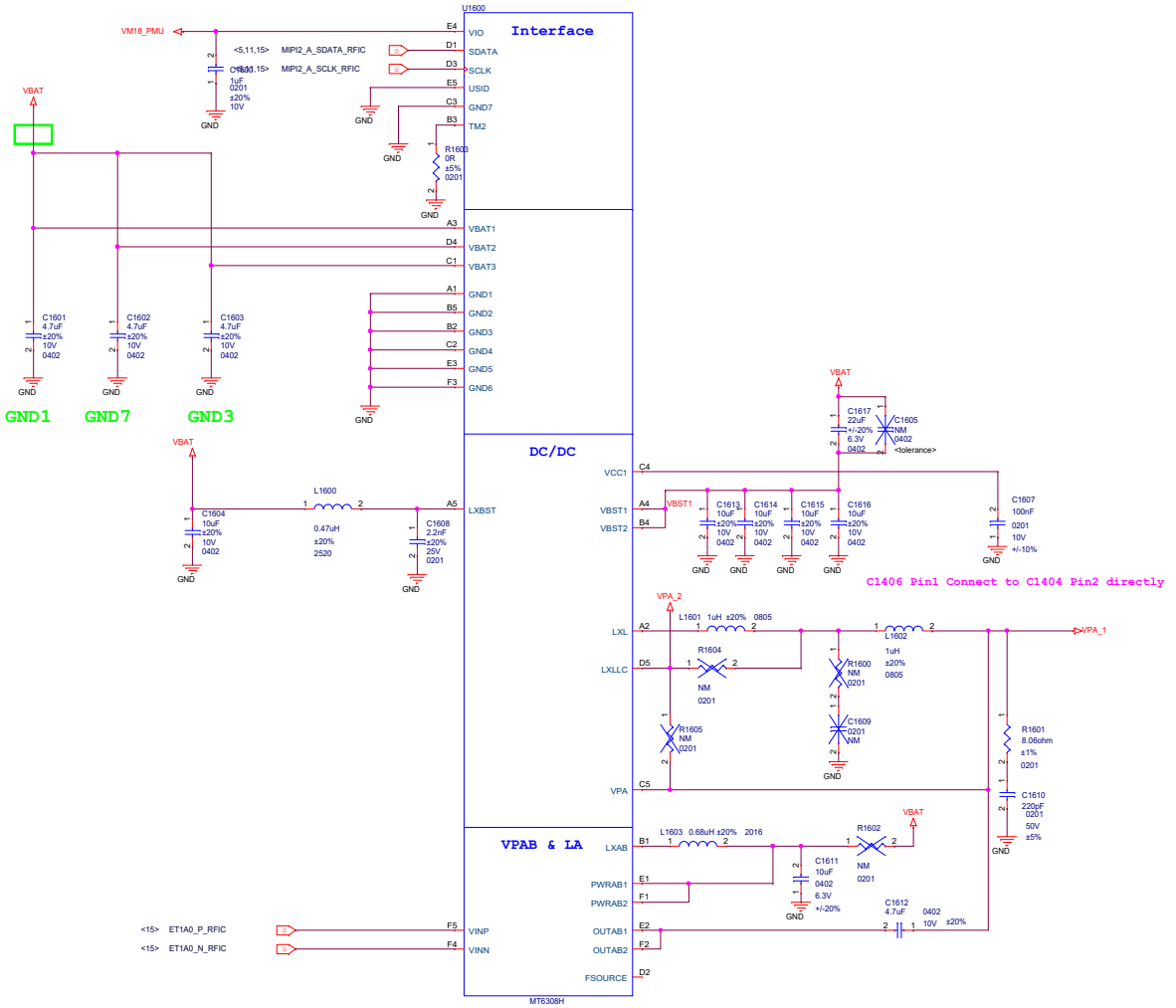

MI PHONE			
Title	MT6883_5GL		
Size A2	Document Number RF_4G_DCDC		Rev P0
Date: Monday, March 22, 2021	Sheet 18 of 73		

MI PHONE			
Title	MT6883_5GL		
Size A2	Document Number RF_5G_DCDC		Rev P0
Date: Monday, March 22, 2021	Sheet 19 of 73		

MI PHONE		
Title MT6873_5GA		
Size A3	Document Number Reserved(for 5G-sub 6G)	Rev P0
Date: Monday, March 22, 2021	Sheet 20 of 73	

MI PHONE		
Title MT6873_5GA		
Size A3	Document Number Reserved(for MM Wave)	Rev P0
Date: Monday, March 22, 2021	Sheet 21 of 73	

MI PHONE		
Title MT6873_5GA		
Size A3	Document Number Reserved(for 5G-WTR I)	Rev P0
Date: Monday, March 22, 2021	Sheet 22 of 73	

MI PHONE		
Title MT6873_5GA		
Size A3	Document Number Reserved(for 5G-WTR P)	Rev P0
Date: Monday, March 22, 2021	Sheet 23 of 73	

MI PHONE			
Title	MT6873_5GA		
Size A3	Document Number Reserved(for 5G-OTHERS)		Rev P0
Date: Monday, March 22, 2021	Sheet 24 of 73		

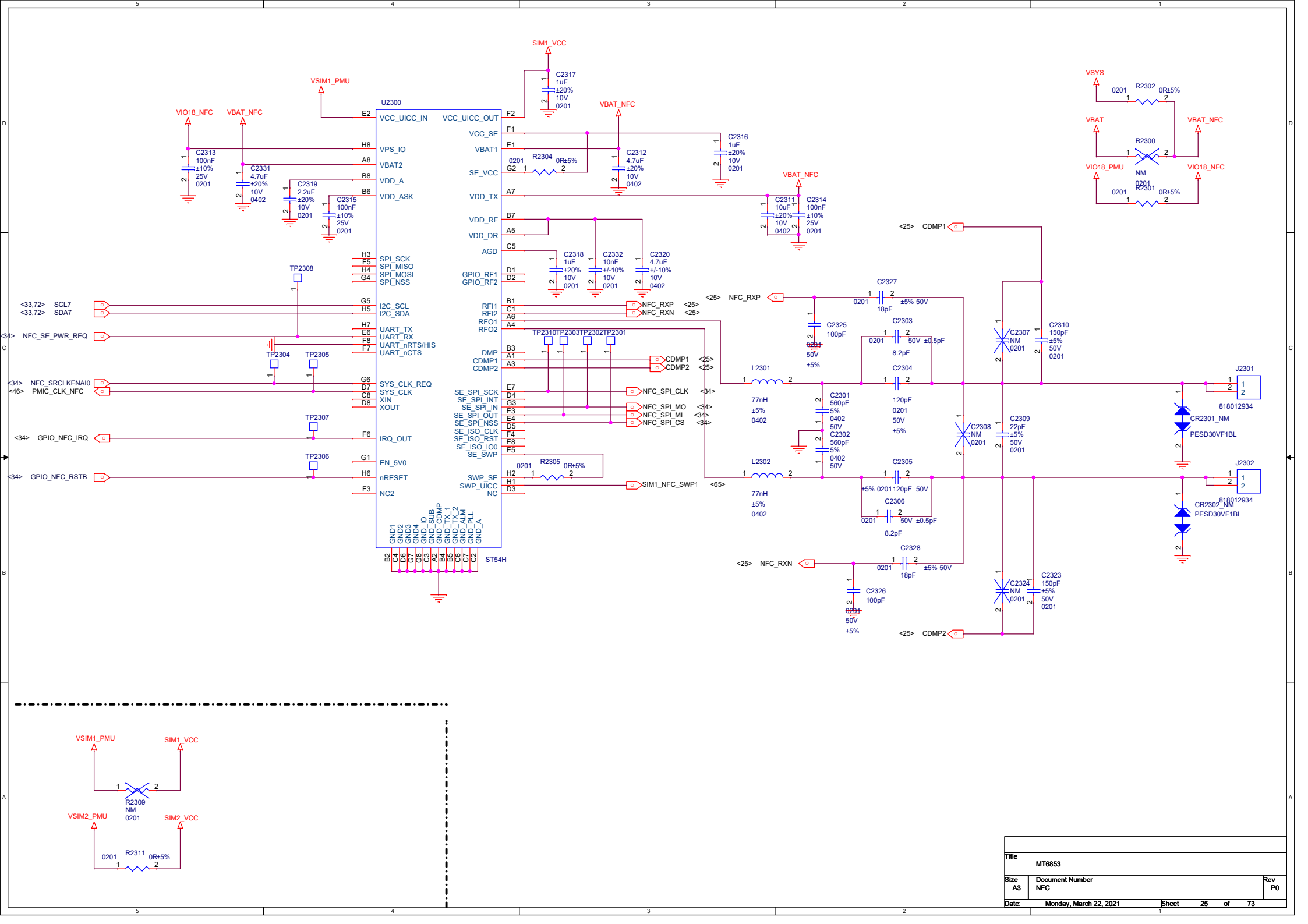
U2300
VCC_UICC_IN
VCC_UICC_OUT
VCC_SE
VBAT1
SE_VCC
VDD_TX
VDD_RF
VDD_DR
AGD
GPIO_RF1
GPIO_RF2
RFI1
RFI2
RFO1
RFO2
DMP
CDMP1
CDMP2
SE_SPI_SCK
SE_SPI_INT
SE_SPI_IN
SE_SPI_OUT
SE_SPI_NSS
SE_ISO_CLK
SE_ISO_RST
SE_ISO_IO0
SE_SWP
SWP_SE
SWP_UICC
NC
VPS_IO
VBAT2
VDD_A
VDD_ASK
SPI_SCK
SPI_MISO
SPI_MOSI
SPI_NSS
I2C_SCL
I2C_SDA
UART_TX
UART_RX
UART_nRTS/HIS
UART_nCTS
SYS_CLK_REQ
SYS_CLK
XIN
XOUT
IRQ_OUT
EN_5V0
nRESET
NC2
GND1
GND2
GND3
GND4
GND_IO
GND_SUB
GND_CDMP
GND_TX_1
GND_TX_2
GND_ALM
GND_PLL
GND_A
ST54H
SIM1_VCC
VSIM1_PMU
VIO18_NFC
VBAT_NFC
VBAT
VSYS
VIO18_PMU
C2317 1uF ±20% 10V 0201
C2313 100nF ±10% 25V 0201
C2331 4.7uF ±20% 10V 0402
C2319 2.2uF ±20% 10V 0201
C2315 100nF ±10% 25V 0201
R2304 0R±5% 0201
C2312 4.7uF ±20% 10V 0402
C2316 1uF ±20% 10V 0201
C2311 10uF ±20% 10V 0402
C2314 100nF ±10% 25V 0201
C2318 1uF ±20% 10V 0201
C2332 10nF +/-10% 10V 0201
C2320 4.7uF +/-10% 10V 0402
R2305 0R±5% 0201
R2302 0R±5% 0201
R2300 NM 0201
R2301 0R±5% 0201
TP2308
TP2304
TP2305
TP2307
TP2306
TP2310
TP2303
TP2302
TP2301
<33,72> SCL7
<33,72> SDA7
<34> NFC_SE_PWR_REQ
<34> NFC_SRCLKENAI0
<46> PMIC_CLK_NFC
<34> GPIO_NFC_IRQ
<34> GPIO_NFC_RSTB
NFC_RXP <25>
NFC_RXN <25>
CDMP1 <25>
CDMP2 <25>
NFC_SPI_CLK <34>
NFC_SPI_MO <34>
NFC_SPI_MI <34>
NFC_SPI_CS <34>
SIM1_NFC_SWP1 <65>
<25> CDMP1
<25> NFC_RXP
<25> NFC_RXN
<25> CDMP2
C2325 100pF 0201 50V ±5%
C2327 18pF 0201 ±5% 50V
C2303 8.2pF 0201 50V ±0.5pF
C2304 120pF 0201 50V ±5%
L2301 77nH ±5% 0402
C2301 560pF 5% 0402 50V
C2302 560pF 5% 0402 50V
L2302 77nH ±5% 0402
C2305 120pF 0201 50V ±5%
C2306 8.2pF 0201 50V ±0.5pF
C2328 18pF 0201 ±5% 50V
C2326 100pF 0201 50V ±5%
C2307 NM 0201
C2308 NM 0201
C2309 22pF ±5% 50V 0201
C2310 150pF ±5% 50V 0201
C2324 NM 0201
C2323 150pF ±5% 50V 0201
J2301 818012934
J2302 818012934
CR2301_NM PESD30VF1BL
CR2302_NM PESD30VF1BL
VSIM1_PMU
SIM1_VCC
R2309 NM 0201
VSIM2_PMU
SIM2_VCC
R2311 0R±5% 0201
Title MT6853
Size A3
Document Number NFC
Rev P0
Date: Monday, March 22, 2021
Sheet 25 of 73

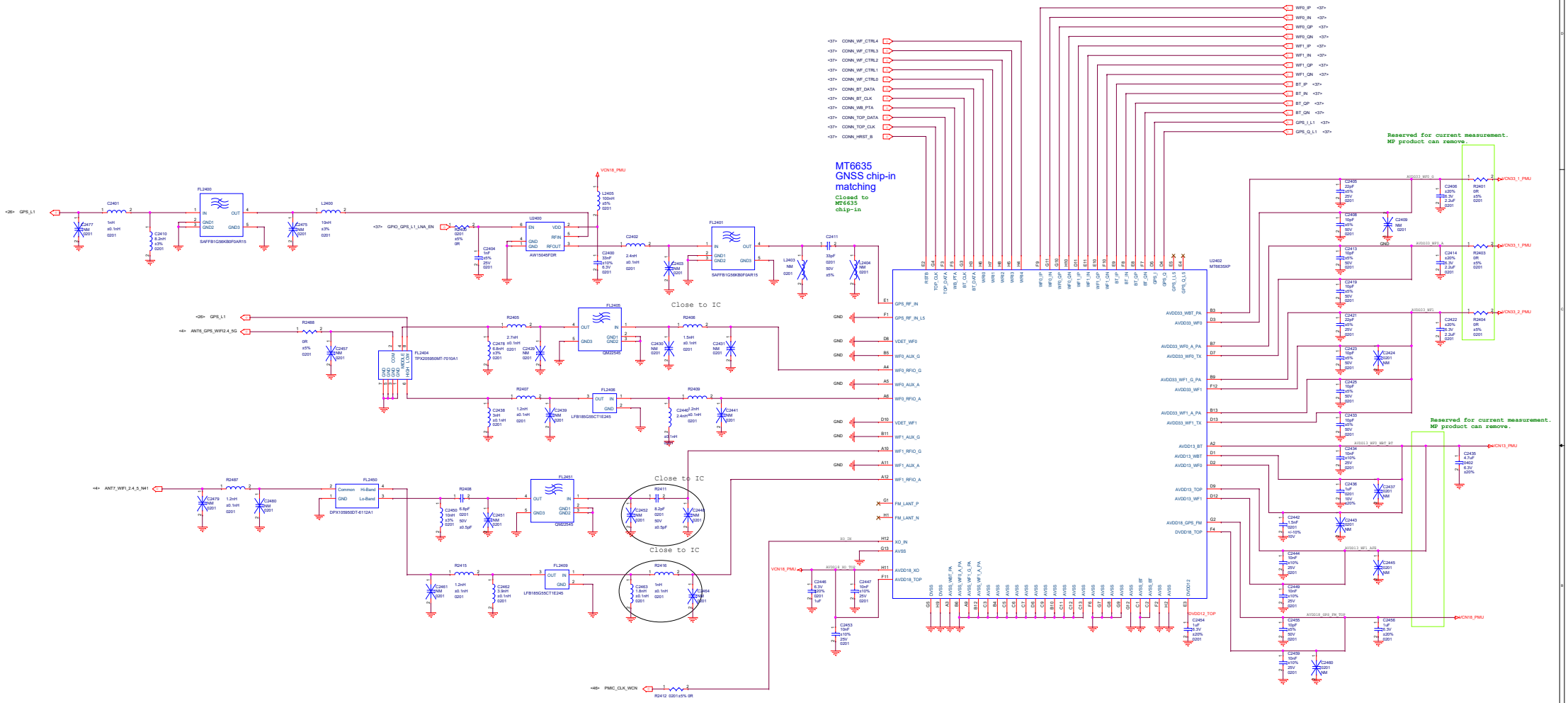

MI PHONE			
File	MT6873_5GA		
Size	Document Number		Rev
A1	WIFI_Interface		
Date: Monday, March 22, 2021	Sheet 26	of 73	

MI PHONE		
Title: MT6873_5GA		
Size: A3	Document Number: Reserved(for WIFI FEM)	Rev: P0
Date: Monday, March 22, 2021	Sheet 27 of 73	

MI PHONE			
Title	MT6873_5GA		
Size A3	Document Number Reserved(WIFIdecoupling)		Rev P0
Date: Monday, March 22, 2021	Sheet 28 of 73		

MI PHONE		
Title: MT6873_5GA		
Size: A3	Document Number: Reserved(for 11ad/11ax)	Rev: P0
Date: Monday, March 22, 2021	Sheet 29 of 73	

MI PHONE		
Title MT6873_5GA		
Size A3	Document Number Reserved(for 11ad/11ax)	Rev P0
Date: Monday, March 22, 2021	Sheet 30 of 73	

MI PHONE		
Title: MT6873_5GA		
Size: A3	Document Number: Reserved(for Digital FM)	Rev: P0
Date: Monday, March 22, 2021	Sheet 31 of 73	

MI PHONE		
Title: MT6873_5GA		
Size: A3	Document Number: Reserved(for Analog FM)	Rev: P0
Date: Monday, March 22, 2021	Sheet 32 of 73	

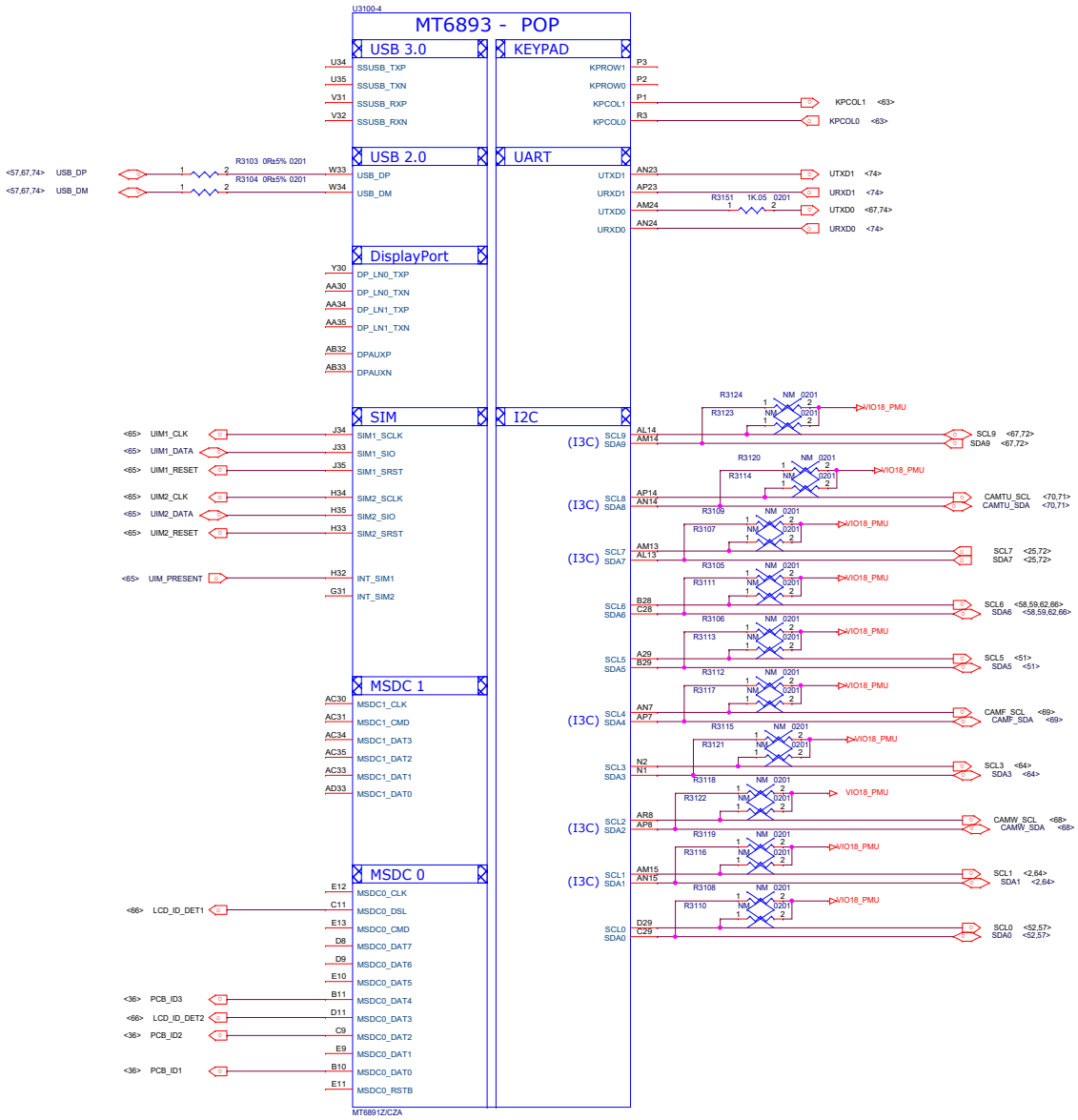

Title	MT6873_5GA
Size	A2
Document Number	MT6893_GPIO_1
Date:	Monday, March 22, 2021
Sheet	33 73

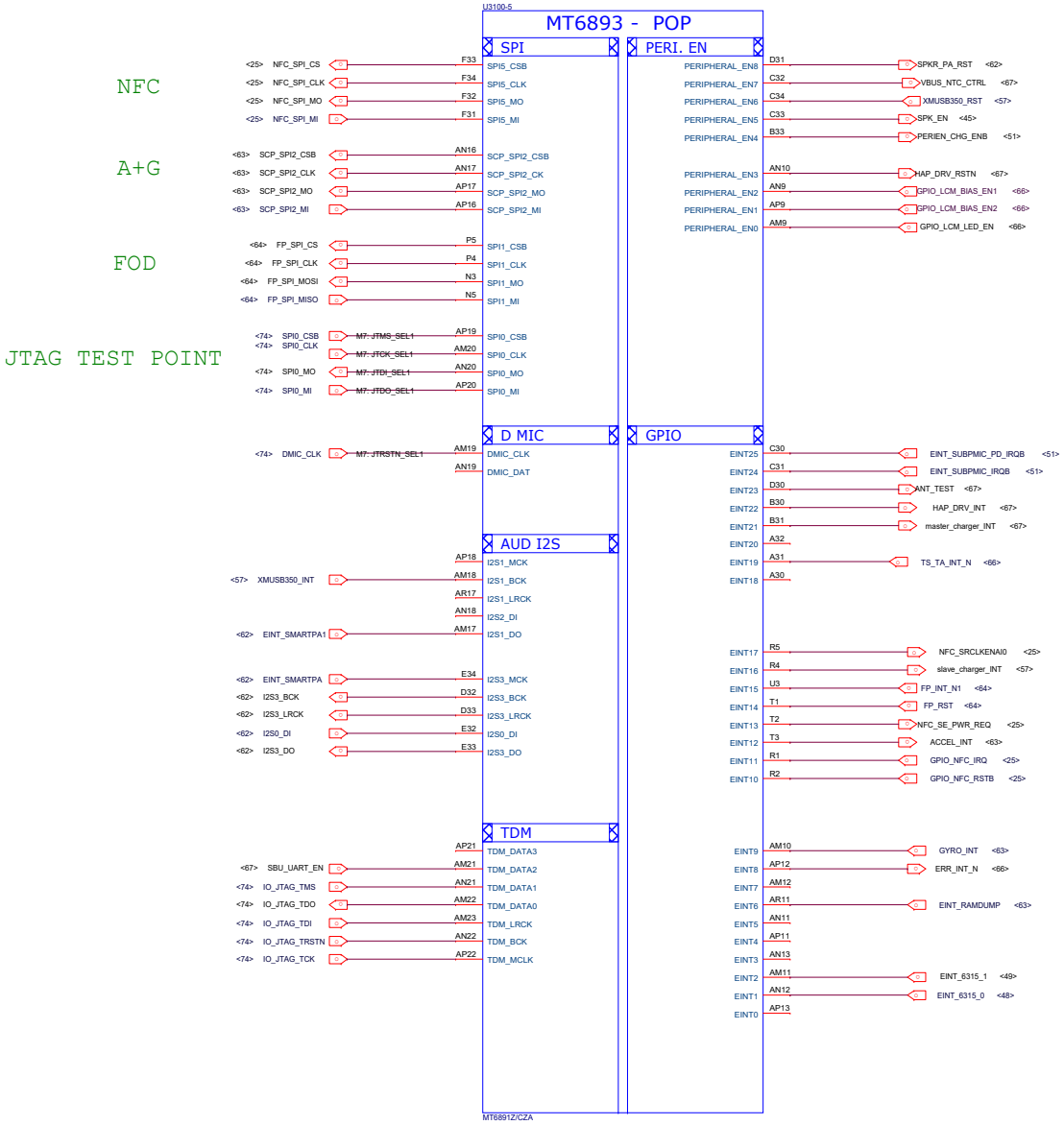

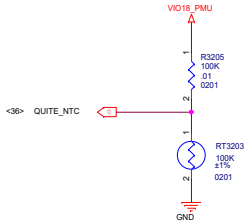

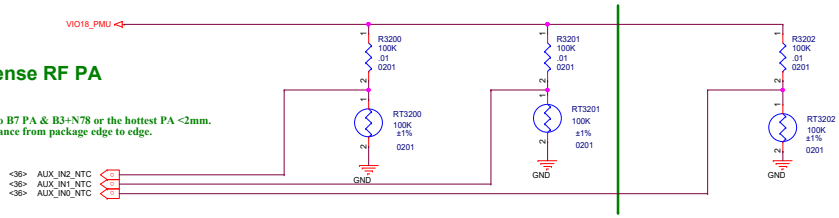

Thermistor to sense RF PA temperature

1. RT3200 & RT3201 must close to B7 PA & B3+N78 or the hottest PA <2mm.
2. The distance is the shortest distance from package edge to edge.

Thermistor to sense AP temperature

1. RT3202 must keep a distance about 6~8 mm away from AP and far from other heat sources 10 mm at least.
2. The distance is the shortest distance from package edge to edge.

Title	MT6873_5GA
Size	A2
Document Number	MT6893_GPIO_2
Date:	Monday, March 22, 2021
Sheet	

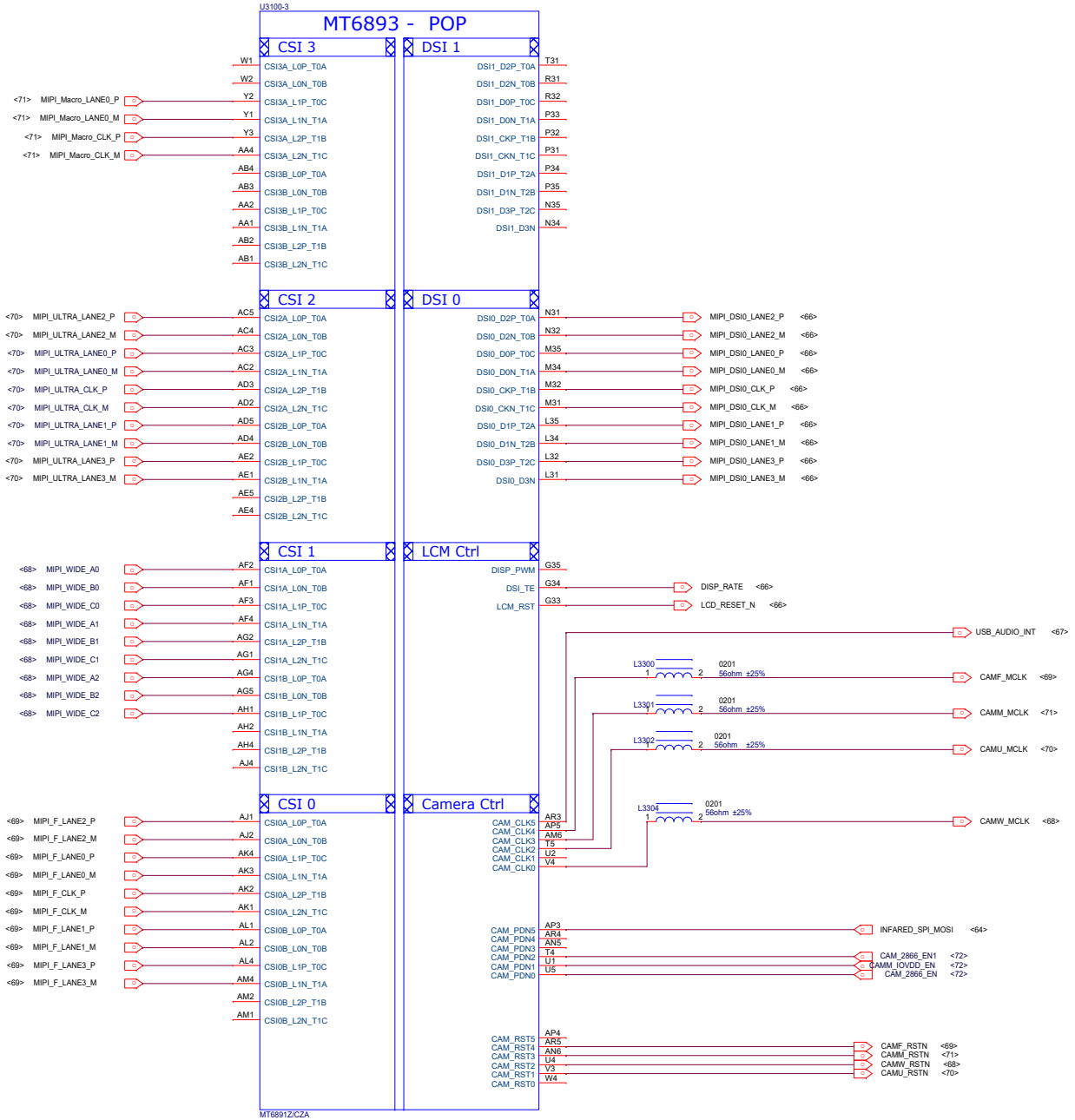

2M depth, 2M Marco one csi phy

MI PHONE			
Title	MT6873_5GA		
Size C	Document Number MT6883_CAM_LCM		Rev
Date: Monday, March 22, 2021	Sheet 35	of 73	

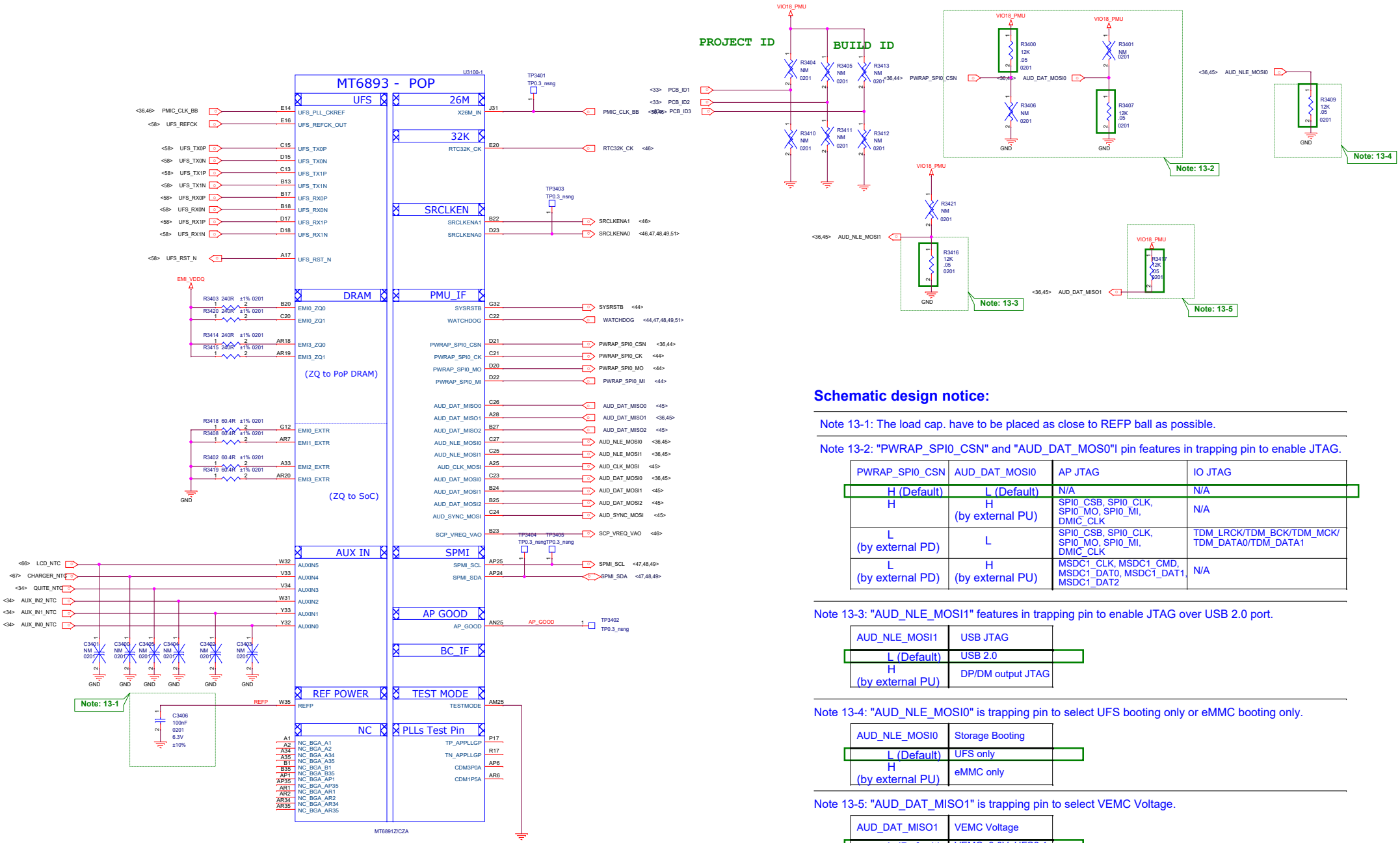

Schematic design notice:

Note 13-1: The load cap. have to be placed as close to REFP ball as possible.

Note 13-2: "PWRAP_SPI0_CSN" and "AUD_DAT_MOS0"I pin features in trapping pin to enable JTAG.

PWRAP_SPI0_CSN	AUD_DAT_MOSI0	AP JTAG	IO JTAG
H (Default)	L (Default)	N/A	N/A
H	H (by external PU)	SPI0_CSB, SPI0_CLK, SPI0_MO, SPI0_MI, DMIC_CLK	N/A
L (by external PD)	L	SPI0_CSB, SPI0_CLK, SPI0_MO, SPI0_MI, DMIC_CLK	TDM_LRCK/TDM_BCK/TDM_MCK/ TDM_DATA0/TDM_DATA1
L (by external PD)	H (by external PU)	MSDC1_CLK, MSDC1_CMD, MSDC1_DAT0, MSDC1_DAT1, MSDC1_DAT2	N/A

Note 13-3: "AUD_NLE_MOSI1" features in trapping pin to enable JTAG over USB 2.0 port.

AUD_NLE_MOSI1	USB JTAG
L (Default)	USB 2.0
H (by external PU)	DP/DM output JTAG

Note 13-4: "AUD_NLE_MOSI0" is trapping pin to select UFS booting only or eMMC booting only.

AUD_NLE_MOSI0	Storage Booting
L (Default)	UFS only
H (by external PU)	eMMC only

Note 13-5: "AUD_DAT_MISO1" is trapping pin to select VEMC Voltage.

AUD_DAT_MISO1	VEMC Voltage
L (Default)	VEMC=3.0V UFS2.1
H (by external PU)	VEMC=2.5V UFS3.0

Title	MT6873_5GA
Size A2	Document Number MT6893_INTF
Date:	Monday, March 22, 2021

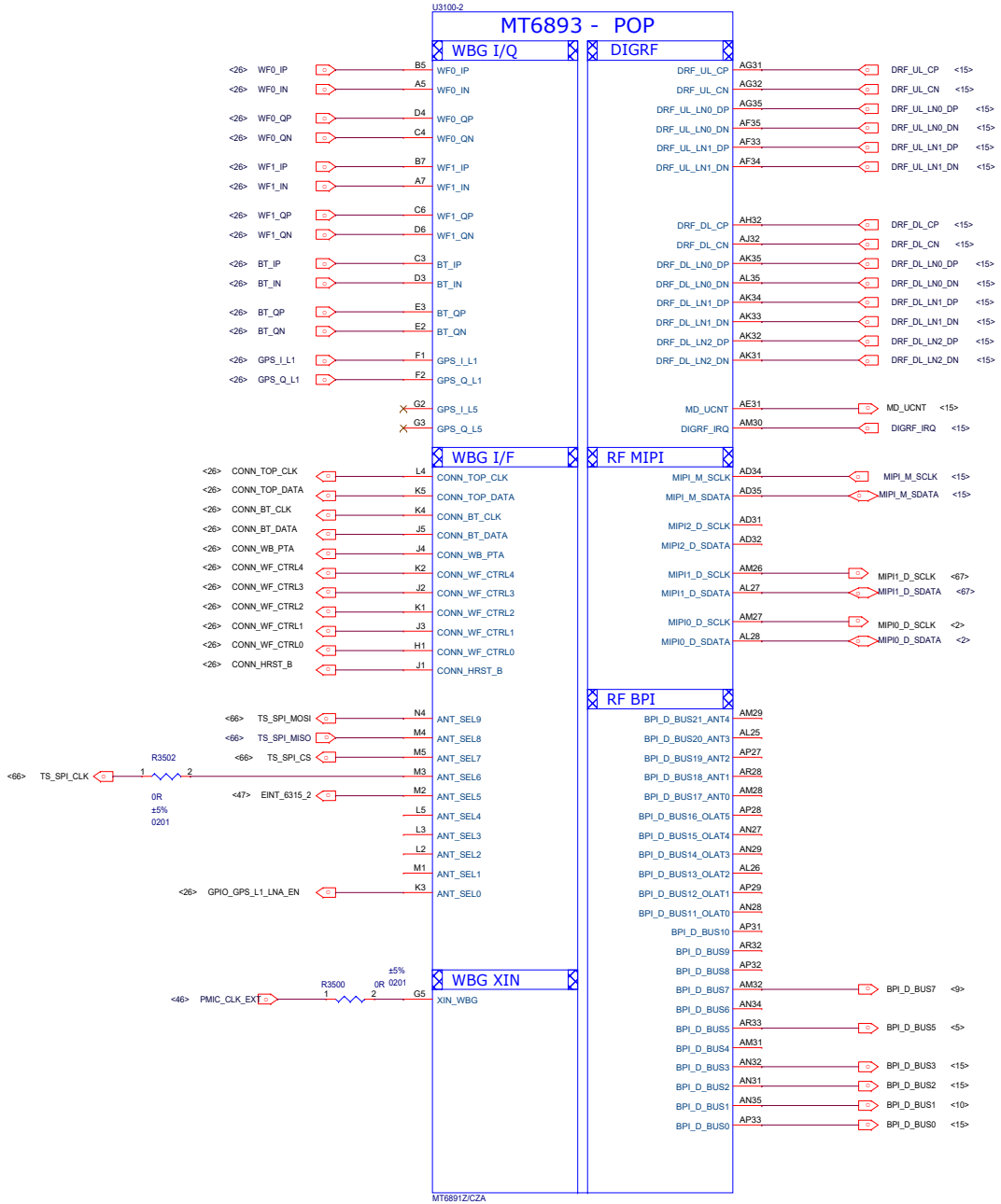

Title	MT6873_5GA
Size	C
Document Number	MT6893_RF_INTF
Date:	Monday, March 22, 2021

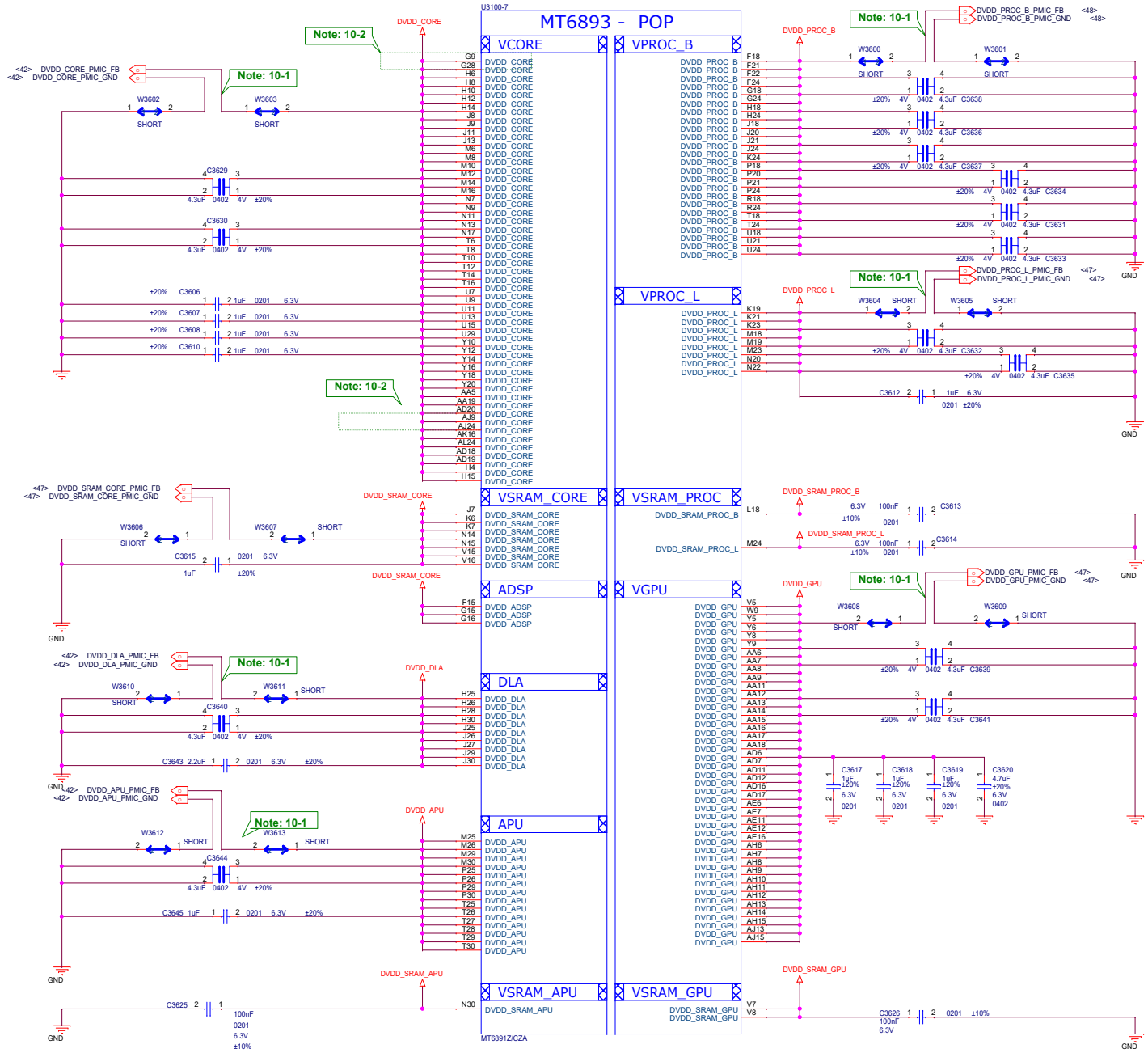

Schematic design notice of "10_BB_POWER_PDN" page.

Note 10-1: Differential pair of PMIC remote sense must be close to BB's ball.

Remote sense trace with GND shielding to PMIC (Differential)

Note 10-2: DVDD_CORE PDN cap must be under BB's ball G28/AJ24/AJ9/G9

The purpose of this symbol is used for including POP LPDDR4X in BOM.

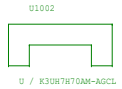

4.3UF三端子电容可酌情替换为4.7UF和1UF的两端子电容

Title	MT6873_5GA
Size	C
Document Number	MT6893_PWR1
Date:	Monday, March 22, 2021

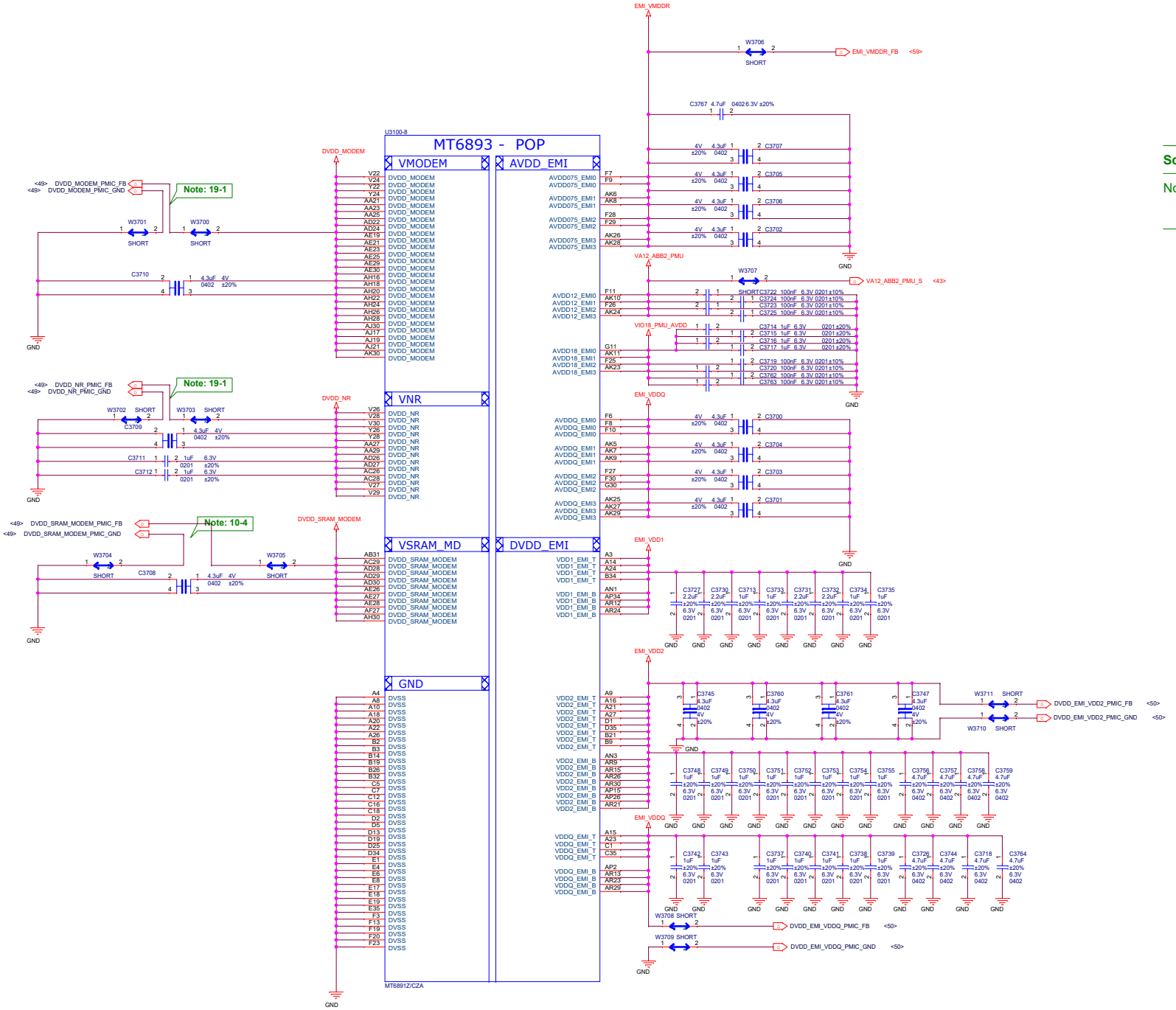

Schematic design notice of "11_BB_POWER_PDN" page.

Note 11-1: Differential pair of PMIC remote sense must be close to BB's ball.
Remote sense trace with GND shielding to PMIC (Differential)

4.3UF三端子电容可酌情替换为4.7UF和1UF的两端子电容

Title	
Size	Document Number
Date:	

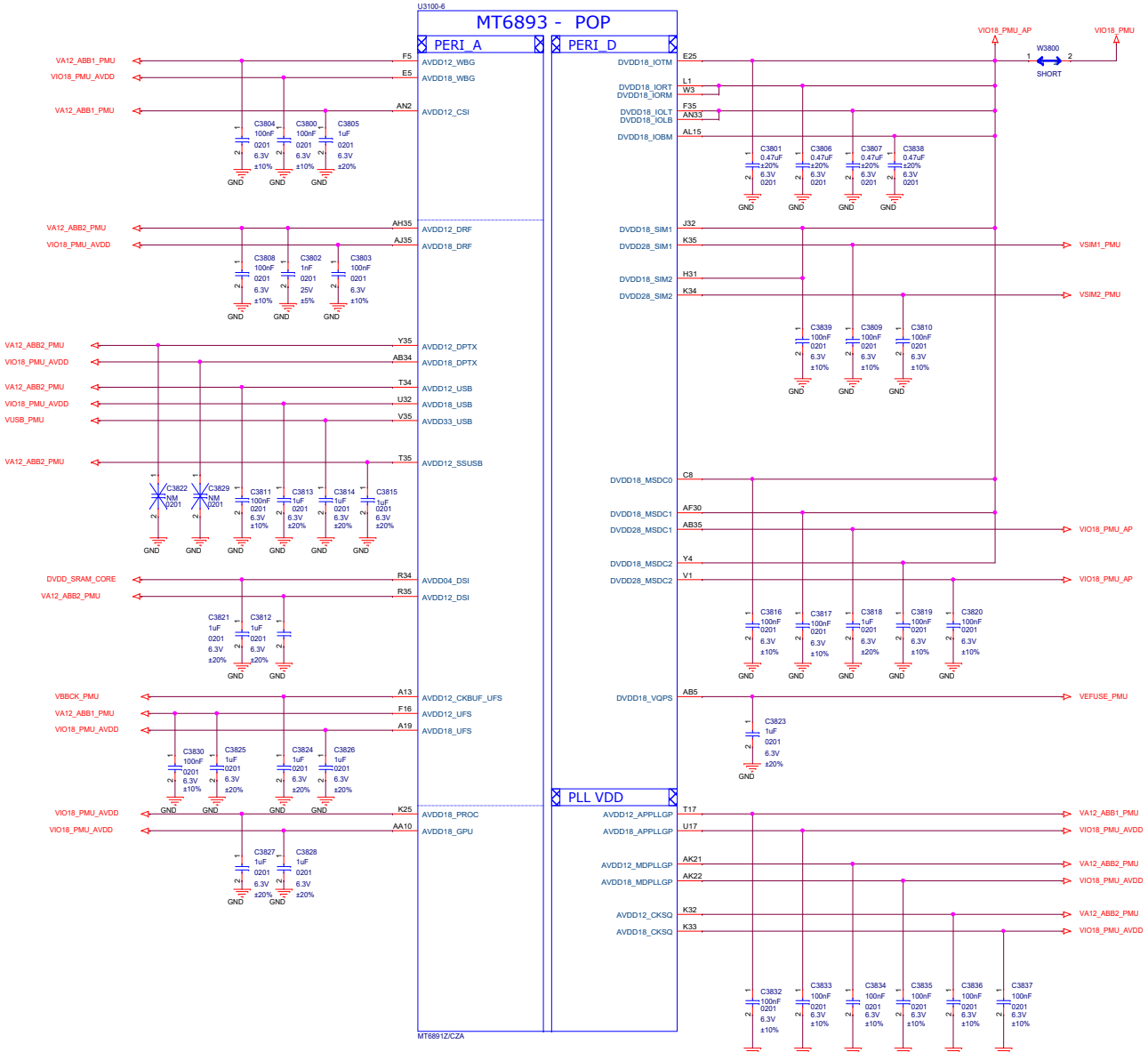

Title	
Size A2	Document Number
Date:	

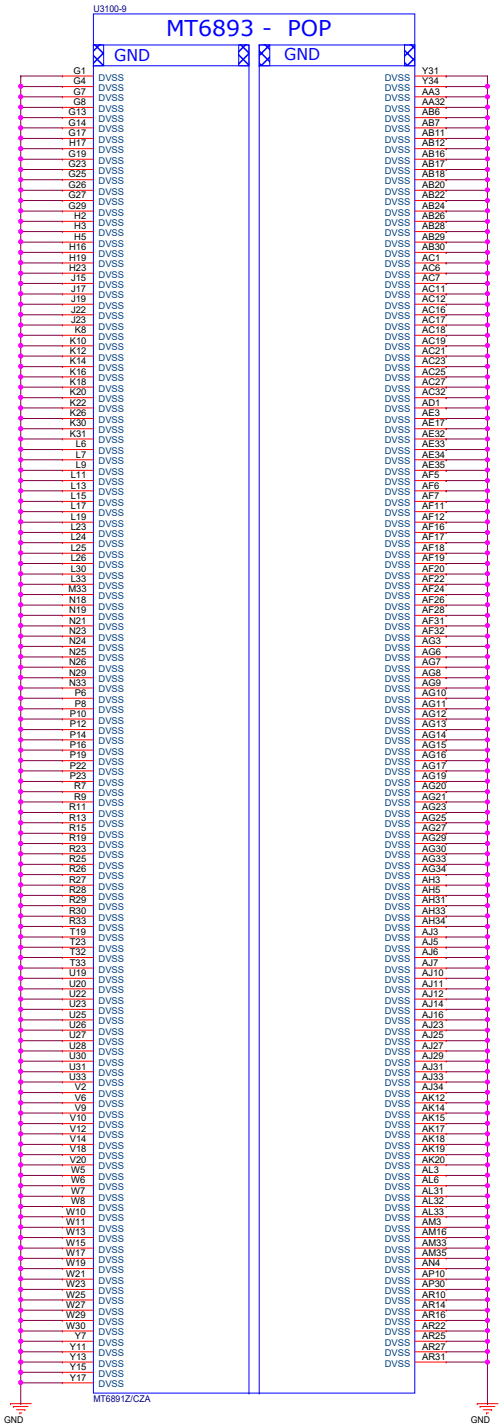

Title	MT6873_5GA
Size: C	Document Number: MT6893_GND
Date:	Monday, March 22, 2021

ALL C out Close to SOC

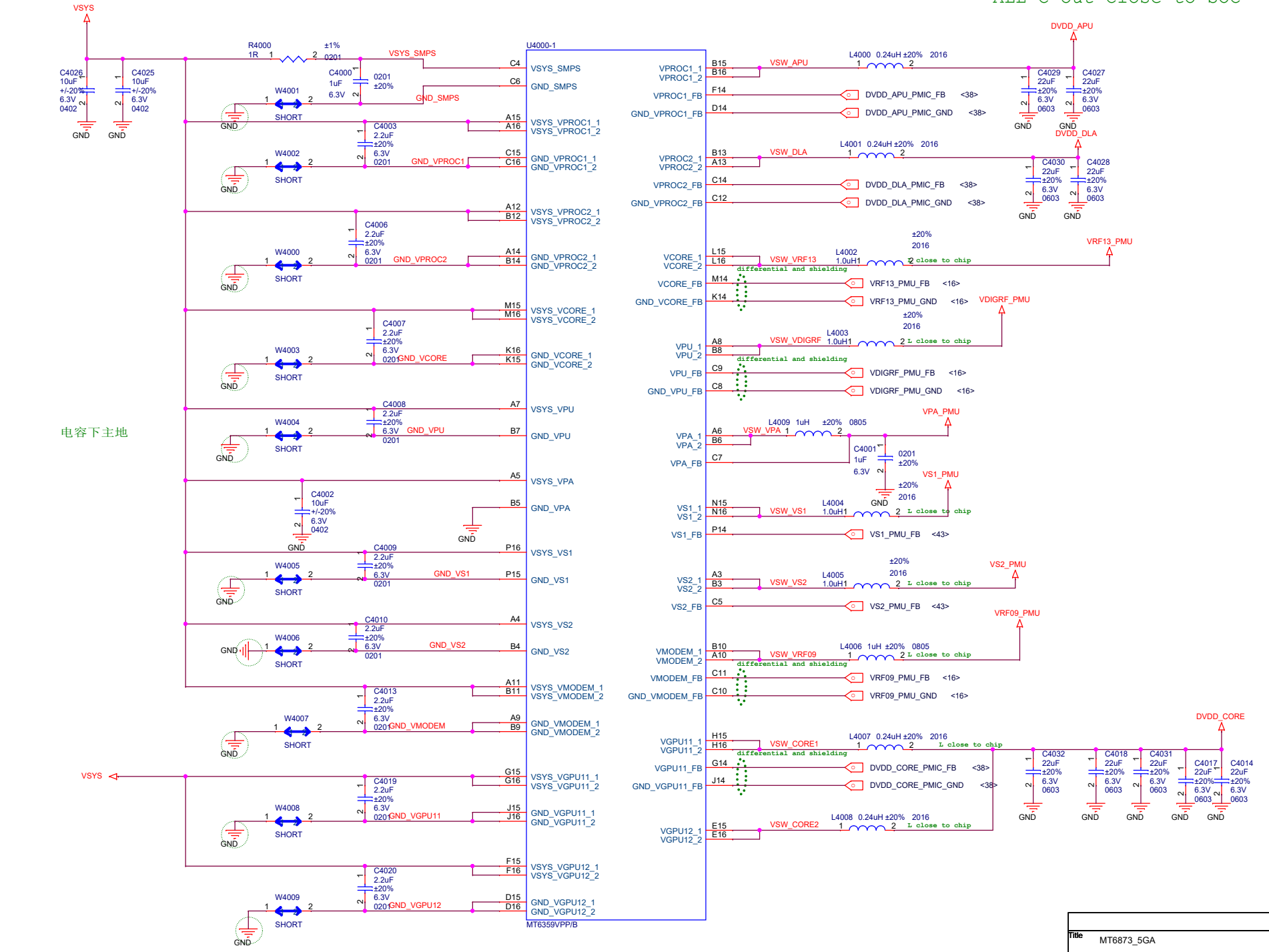

Title	MT6873_5GA
Size	A3
Document Number	MT6359_Buck
Date:	Monday, March 22, 2021

1. "Typical Cap" defined in design notice is the minimum cap. to LDO Cout.
2. NC cap can move to application, if (PCB L<20nH, PCB R<0.2mohm)
=> value and placement of Cap, please refer design notice

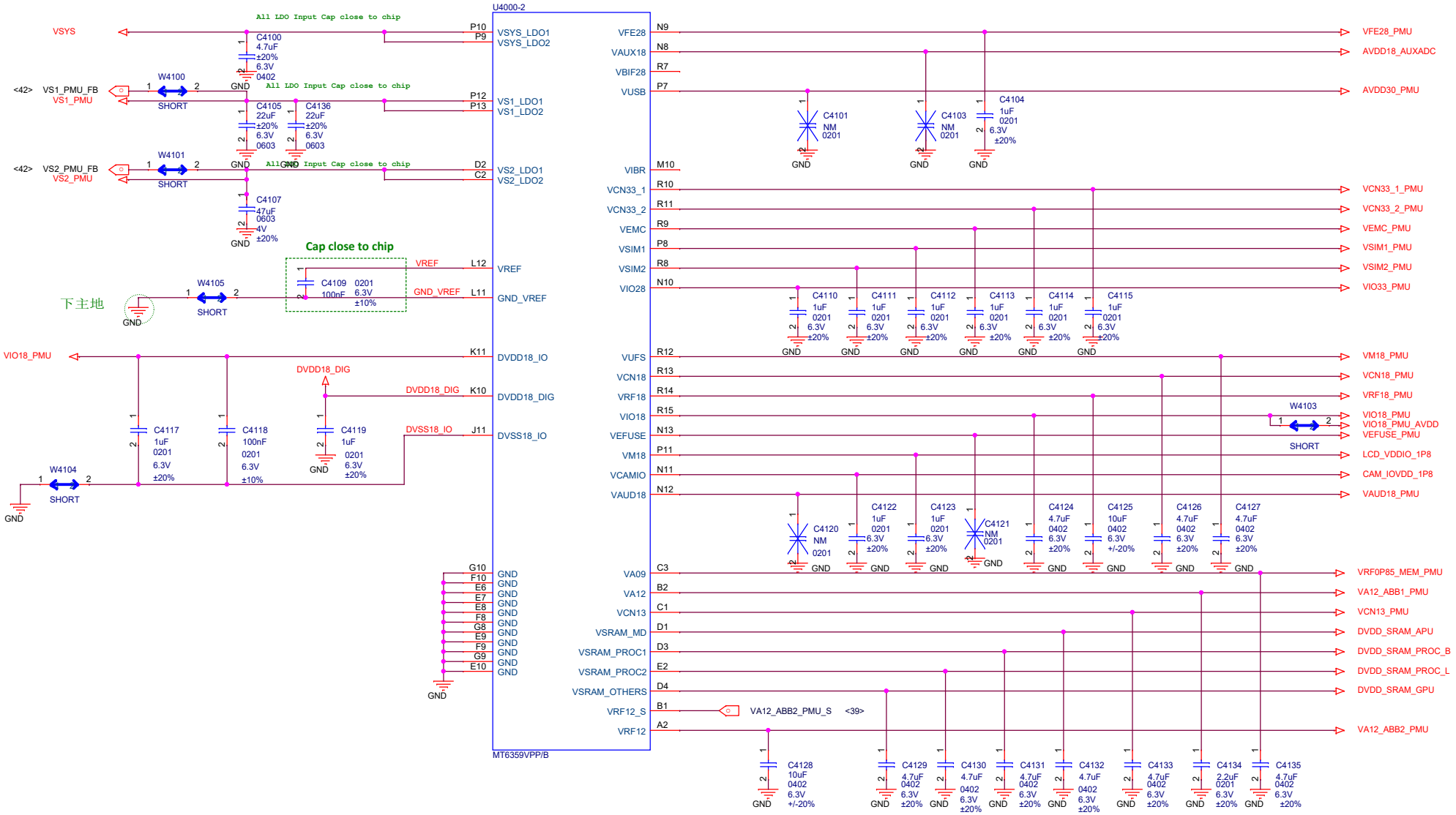

Title	MT6873_5GA
Size	A3
Document Number	MT6359_LDO
Date:	Monday, March 22, 2021

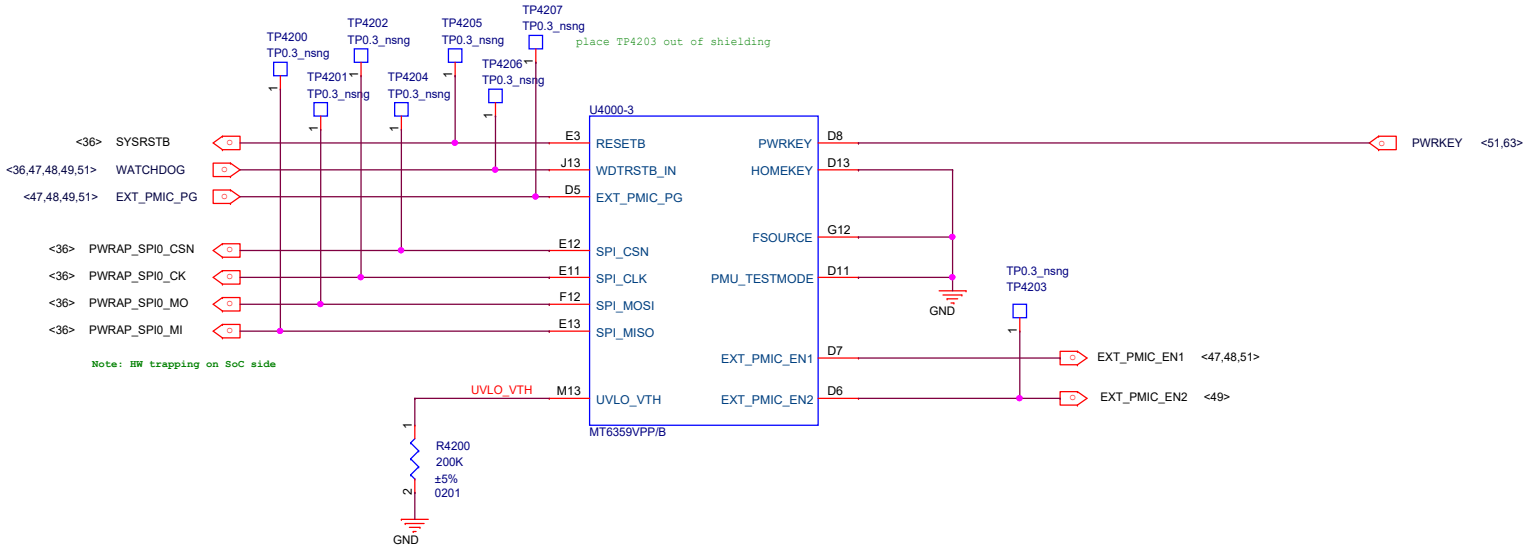

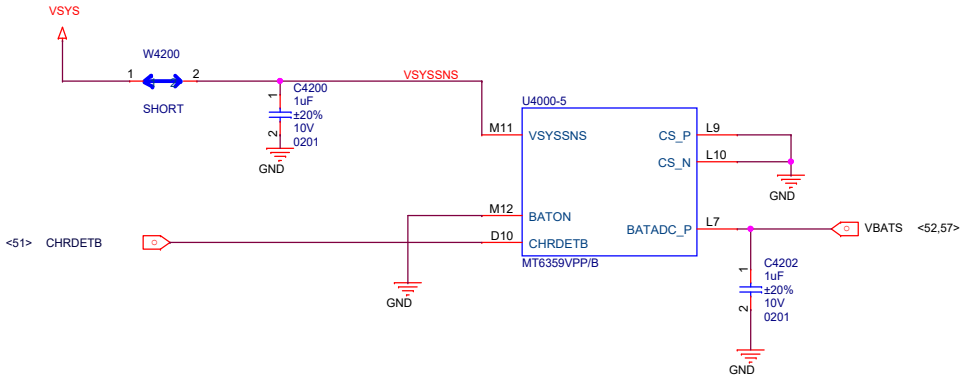

Title	MT6873_5GA
Size A3	Document Number MT6359_General
Date:	Monday, March 22, 2021

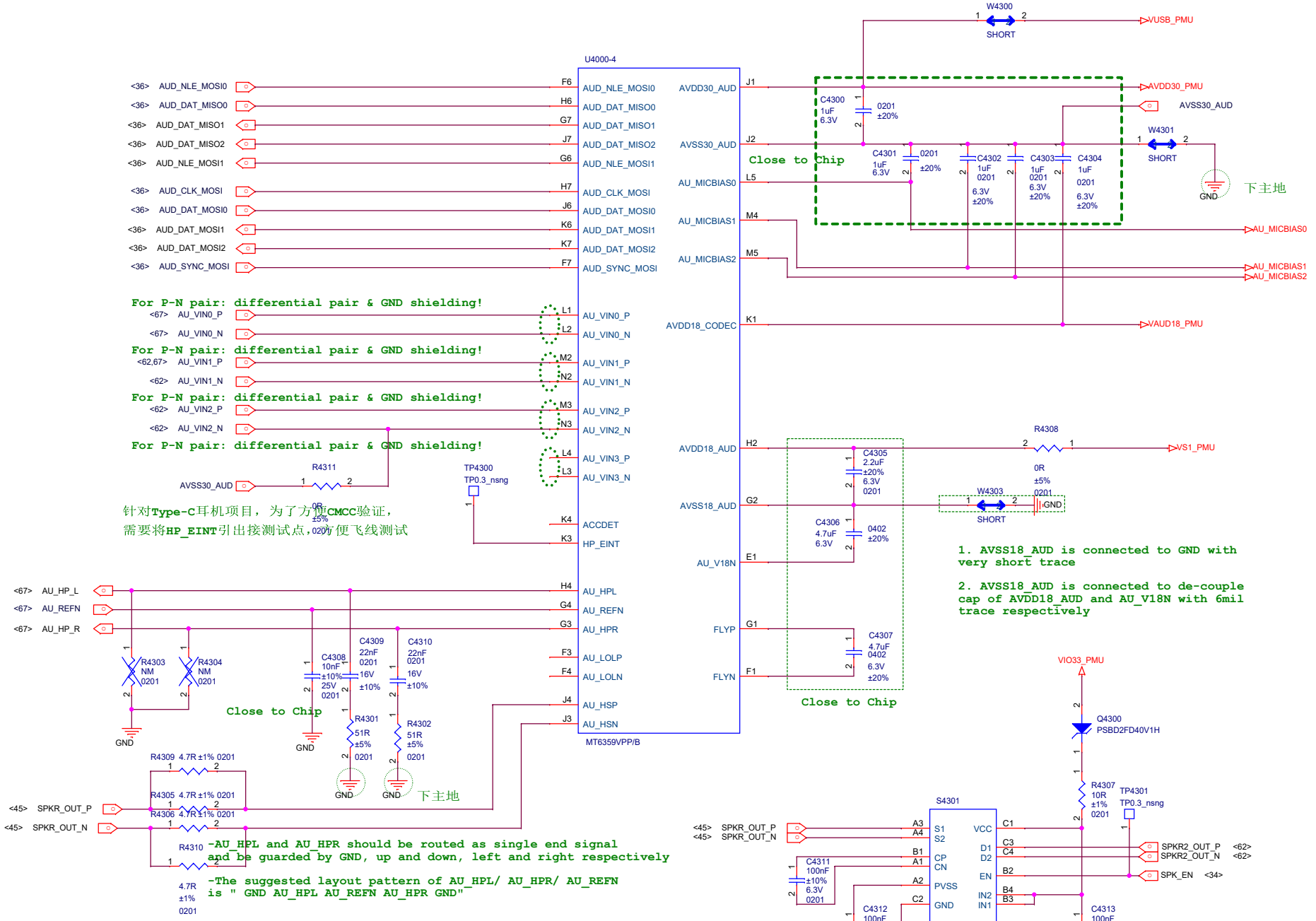

Title	MT6873_5GA
Size A3	Document Number MT6359_AUDIO
Date:	Monday, March 22, 2021

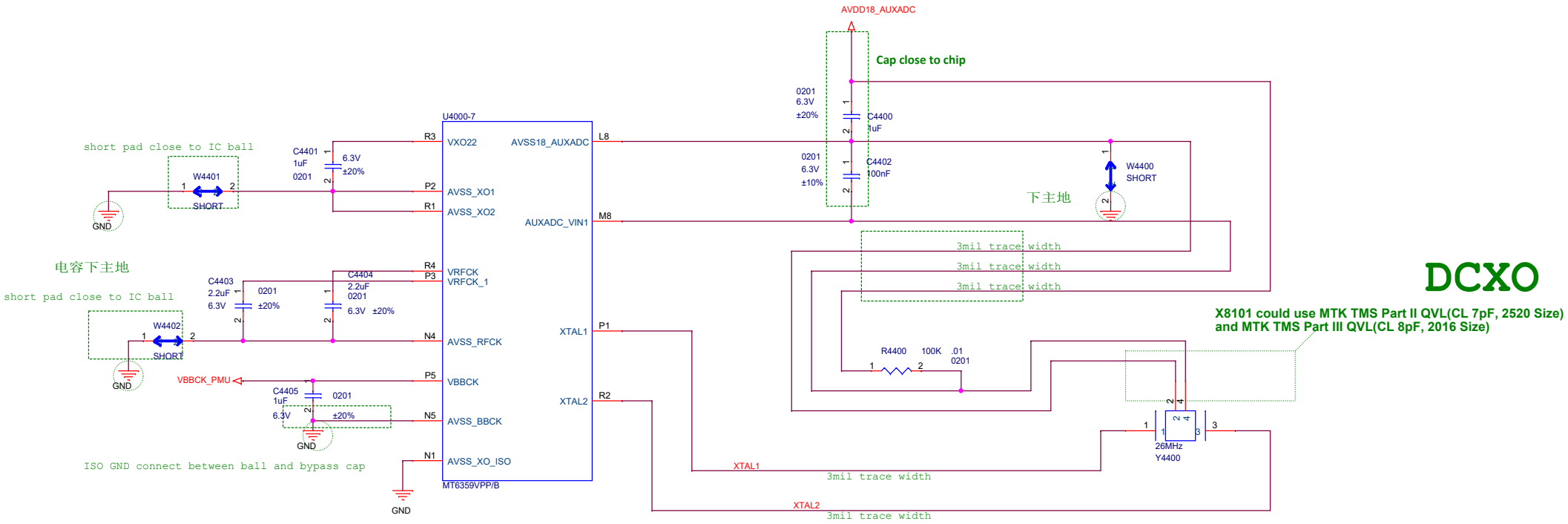

Route XTAL1/ XTAL2/ AVDD18_AUXADC/ AUXADC_VIN/ AVSS18_AUXADC with 3mils width traces and well GND shielding.

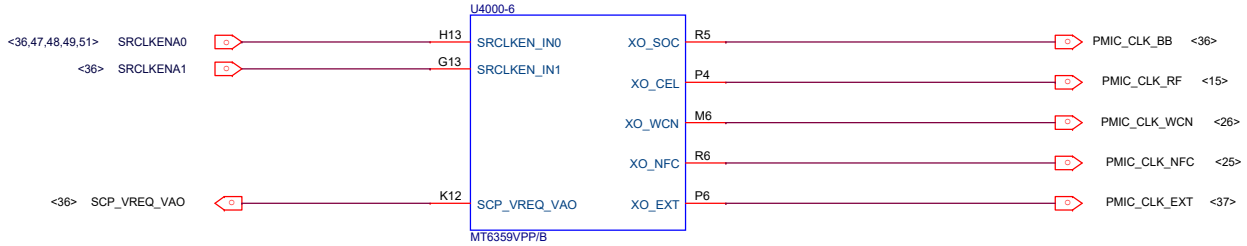

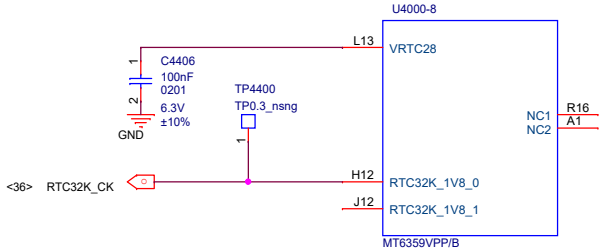

Title	MT6873_5GA
Size A3	Document Number MT6359_Clock
Date:	Monday, March 22, 2021

MT6315 4-Phase Buck (GPU)

ALL C out Close to SOC

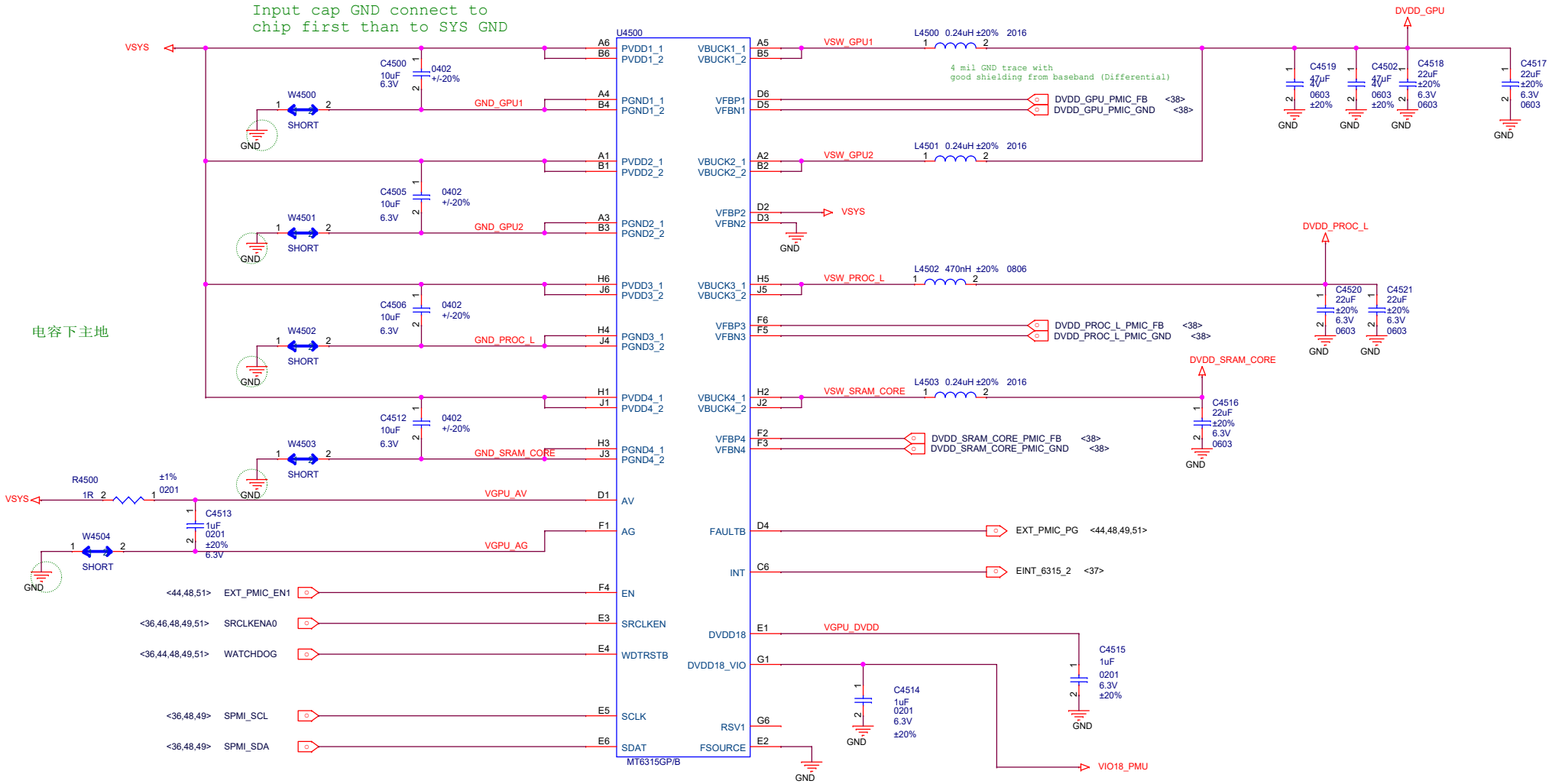

Title	MT6873_5GA
Size	A3
Document Number	MT6315_VGPU
Date:	Monday, March 22, 2021

MT6315 4-Phase Buck (CPU)

Input cap GND connect to
chip first than to SYS GND

ALL C out Close to SOC

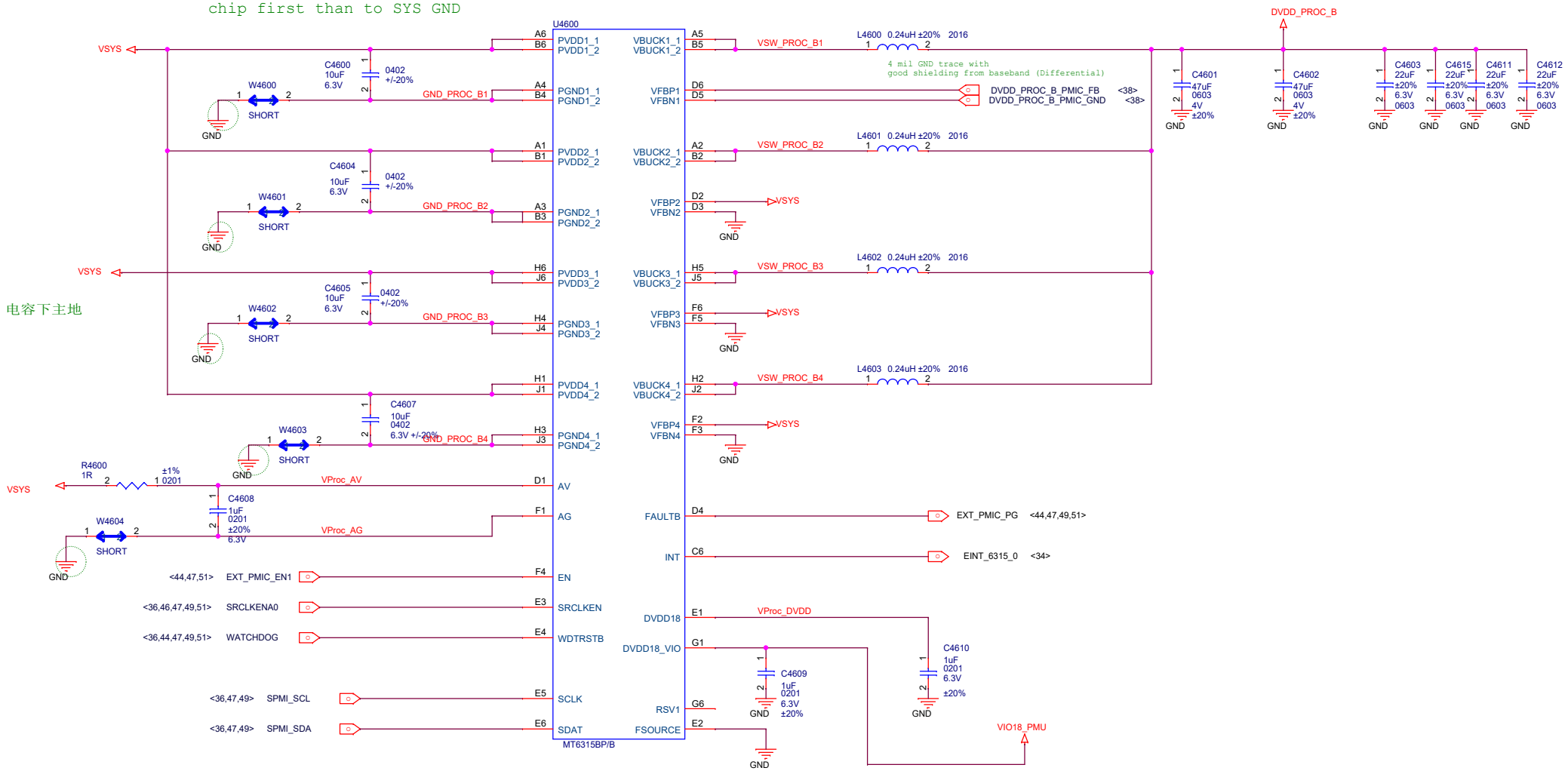

Title	MT6873_5GA
Size A3	Document Number MT6315_VCPU
Date:	Monday, March 22, 2021

MT6315 4-Phase Buck (MD)

ALL C out Close to SOC

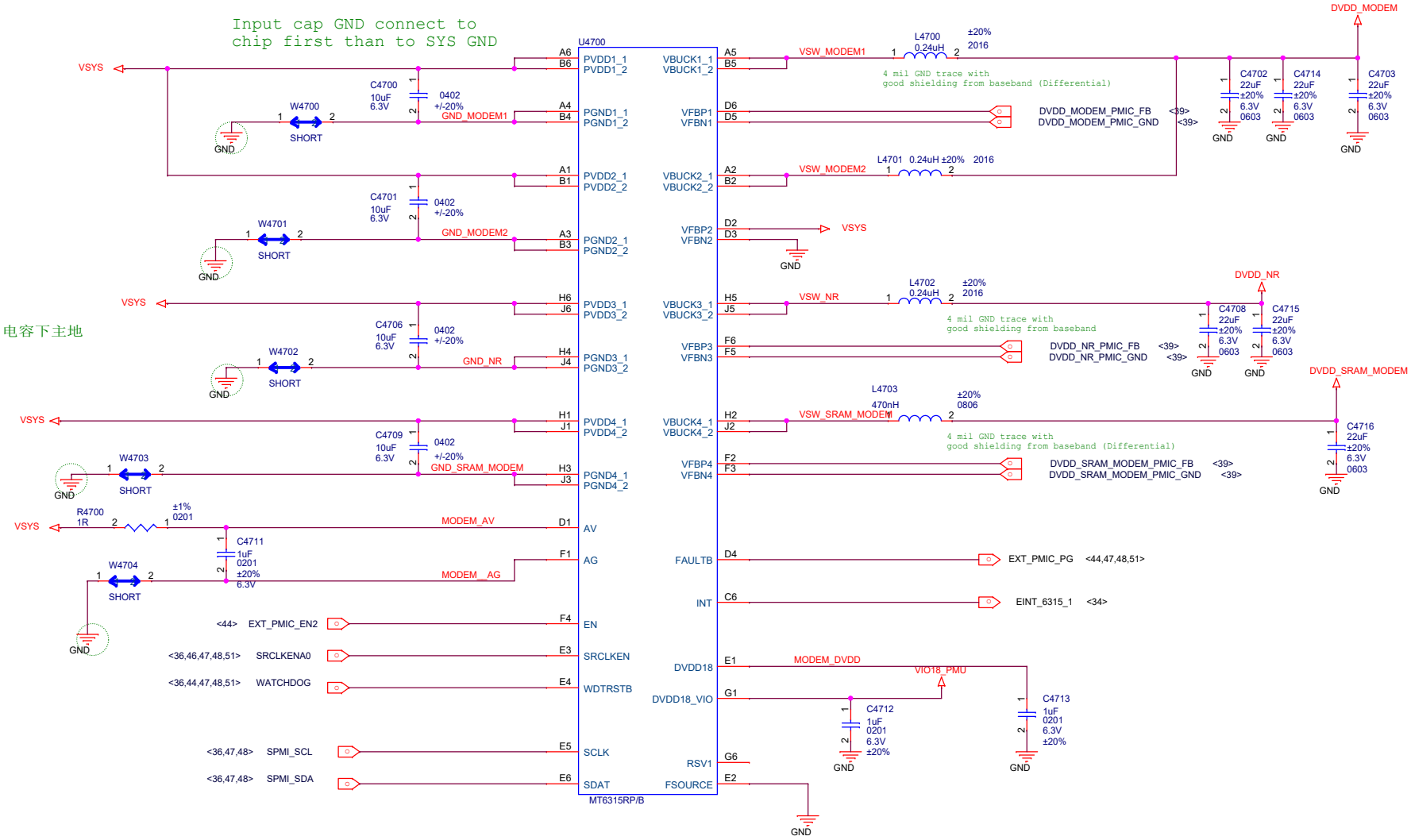

Title	MT6873_5GA
Size	A3
Document Number	MT6315_VMD
Date:	Monday, March 22, 2021

ALL C out Close to DDR

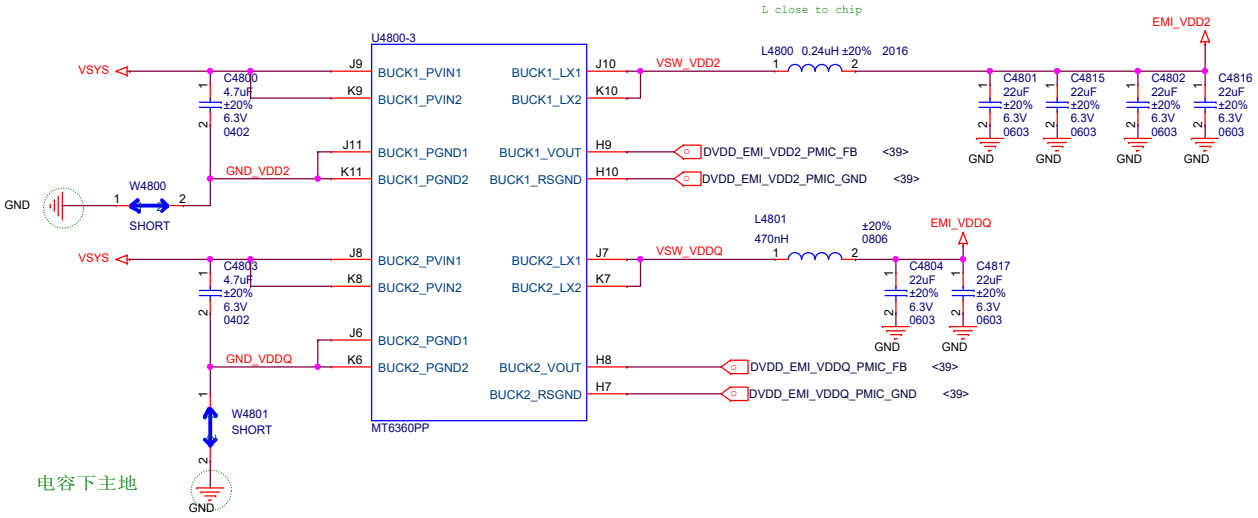

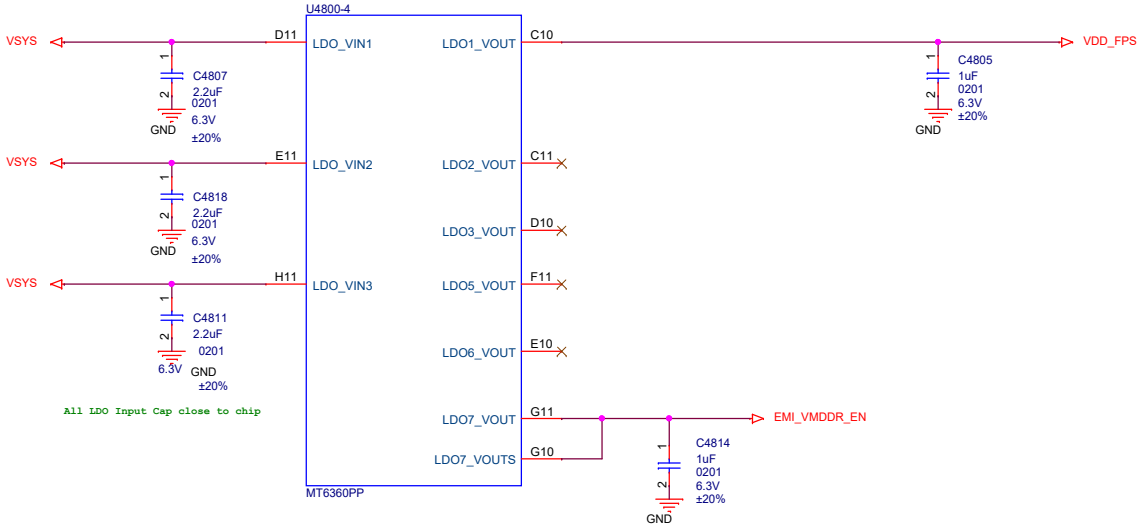

LDO1	VFP
LDO2	VTP
LDO3	VMC
LDO5	SD_CARD_2P95
LDO6	
LDO7	VMDDR_EN

Title	MT6873_5GA
Size	A3
Document Number	MT6360_BUCK_LDO
Date:	Monday, March 22, 2021

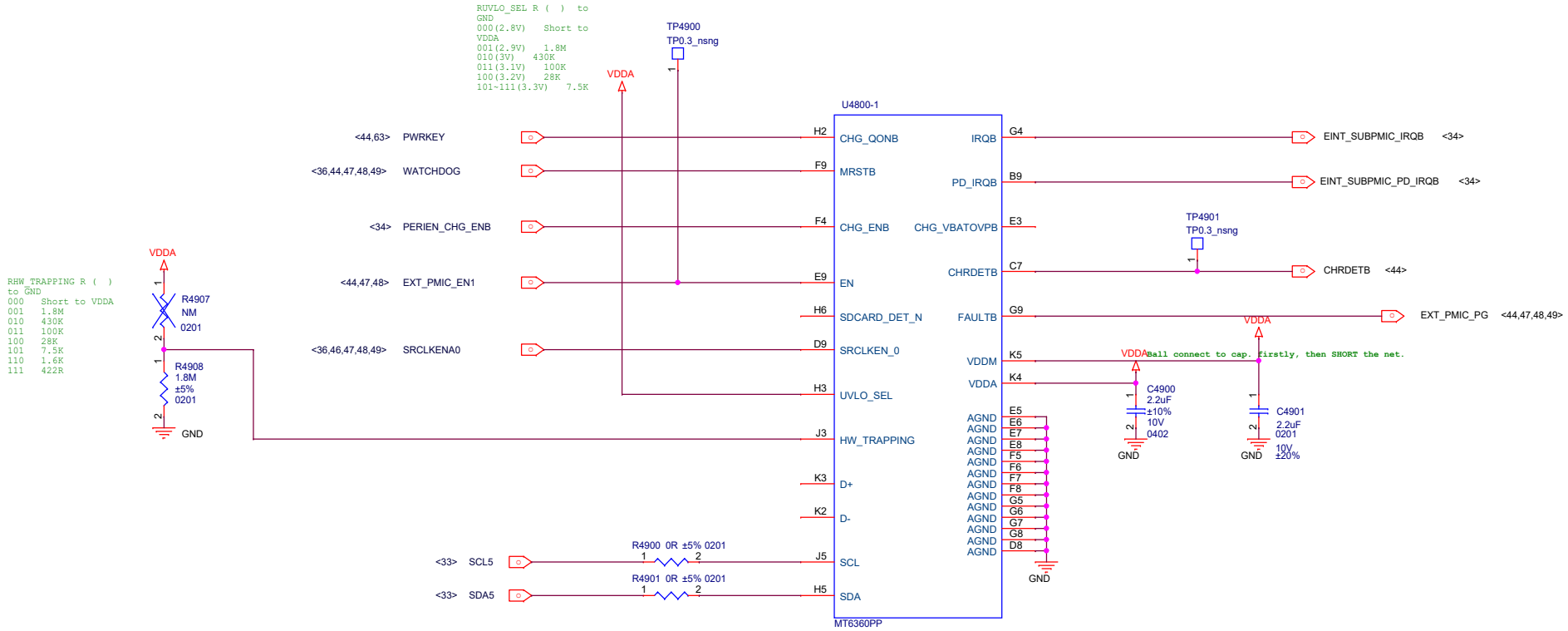

Title	MT6873_5GA
Size	A3
Document Number	MT6360_General
Date:	Monday, March 22, 2021

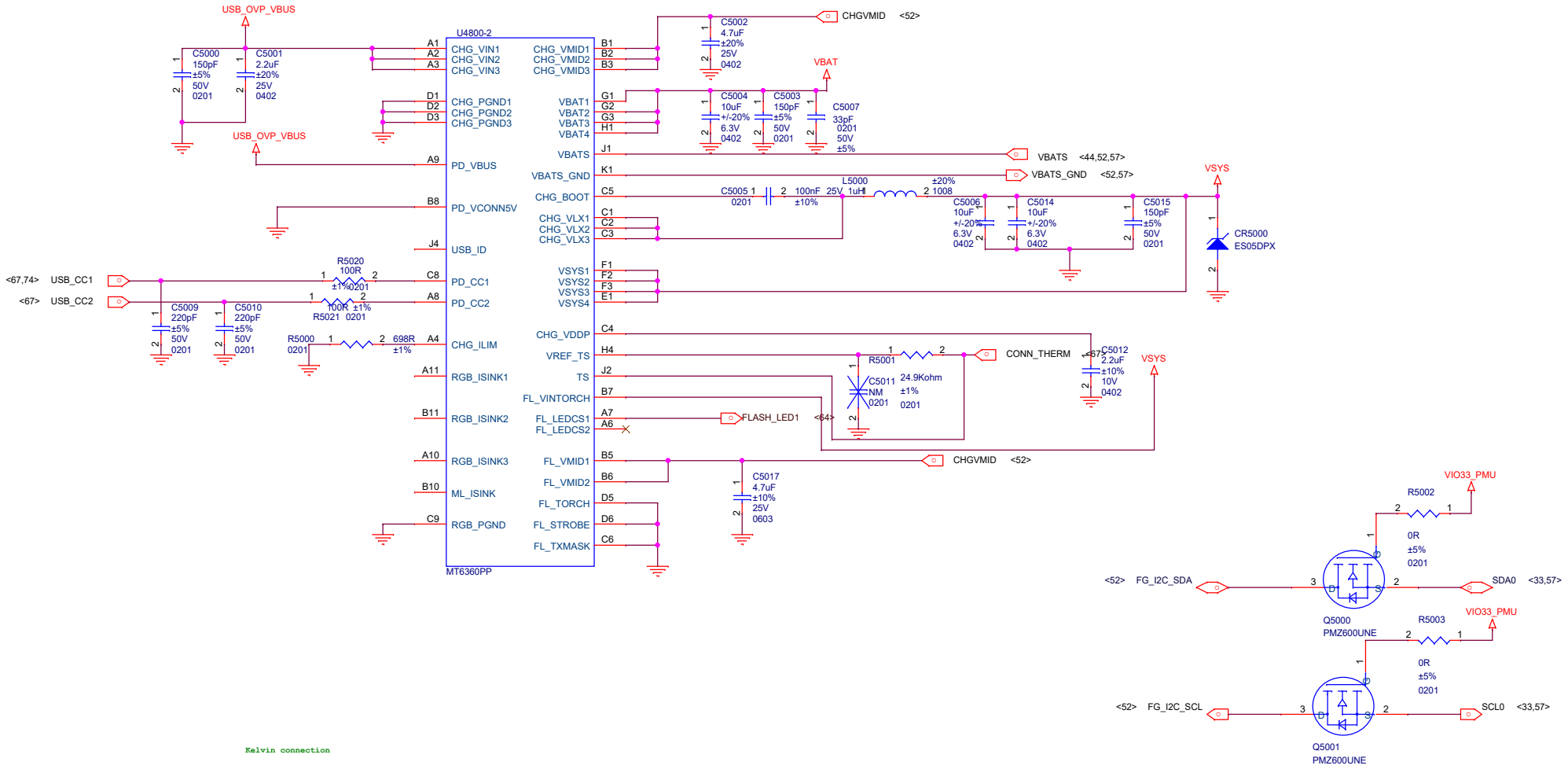

Kelvin connection

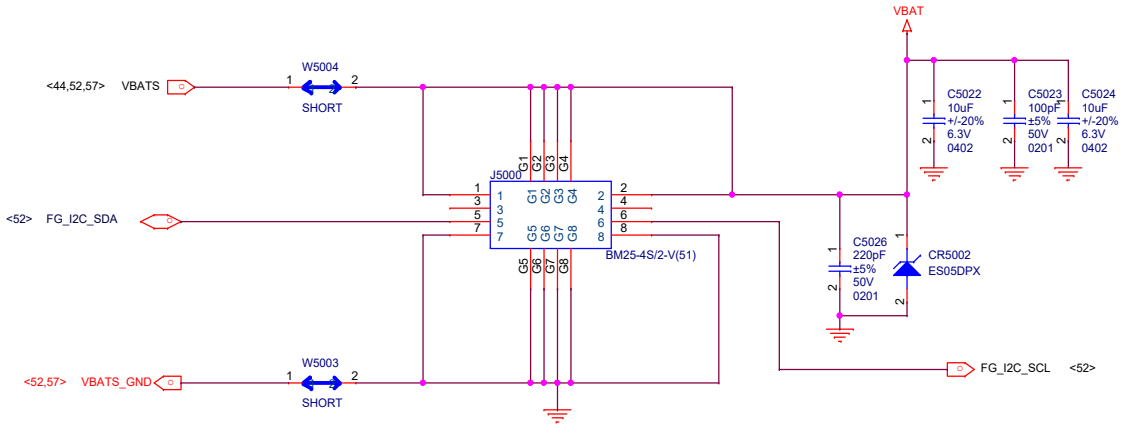

Title	MT6873_5GA
Size A3	Document Number MT6360_Charger
Date:	Monday, March 22, 2021

MI PHONE	
Title	MT6873_5GA
Size A4	Document Number Reserved(for charger)
Date: Monday, March 22, 2021	

Title	MT6873_5GA
Size C	Document Number Reserved(for SMB1355)
Date:	Monday, March 22, 2021

Title	MT6873_5GA
Size C	Document Number Reserved(for SMB1355)
Date:	Monday, March 22, 2021

Title	MT6873_5GA
Size C	Document Number Reserved(for SMB1355)
Date:	Monday, March 22, 2021

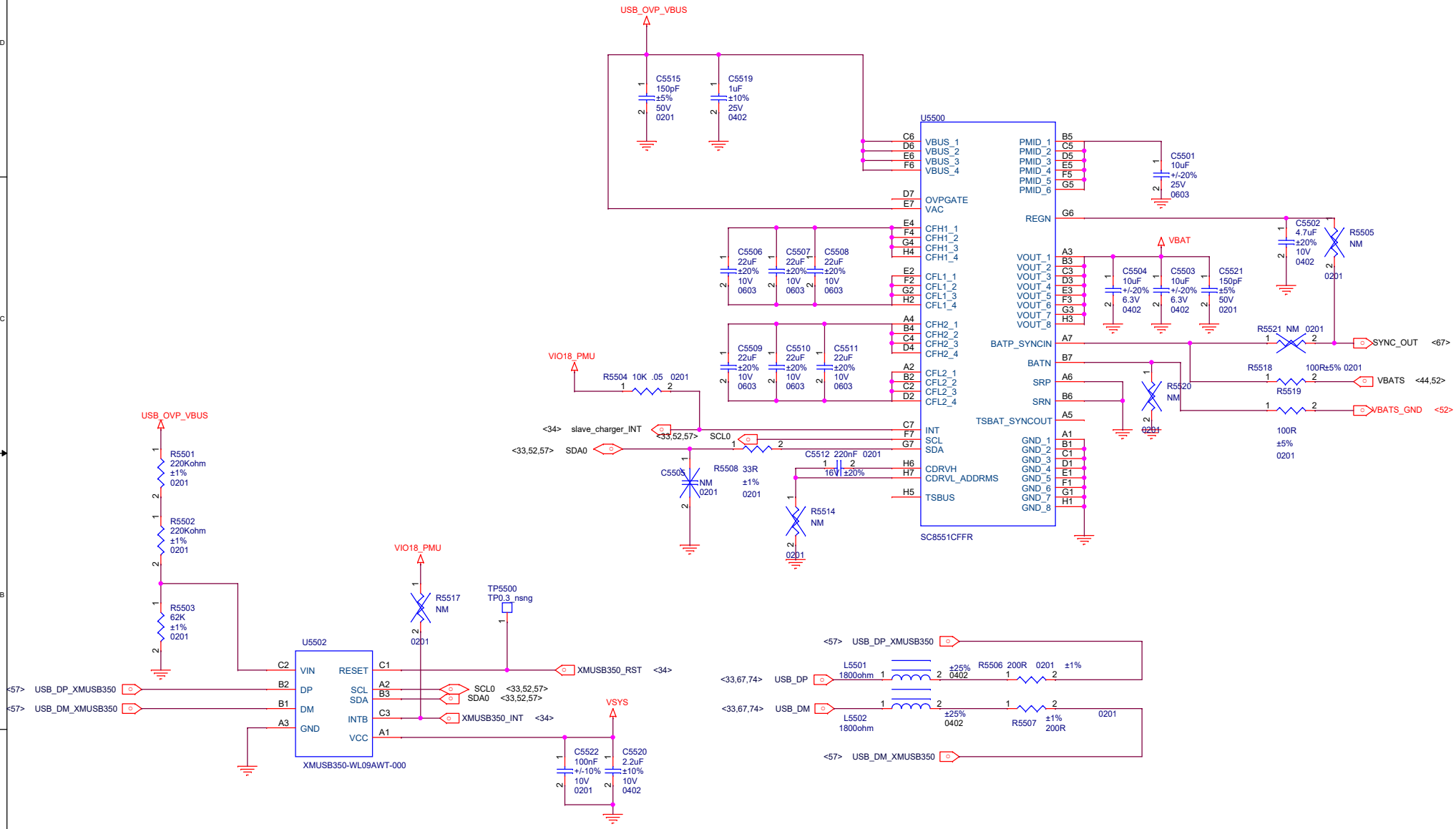

MI PHONE	
Title	
Size A3	Document Number Reserved(for SMB1355)
Date: Monday, March 22, 2021	MT0873_5GA

UFS 3.1

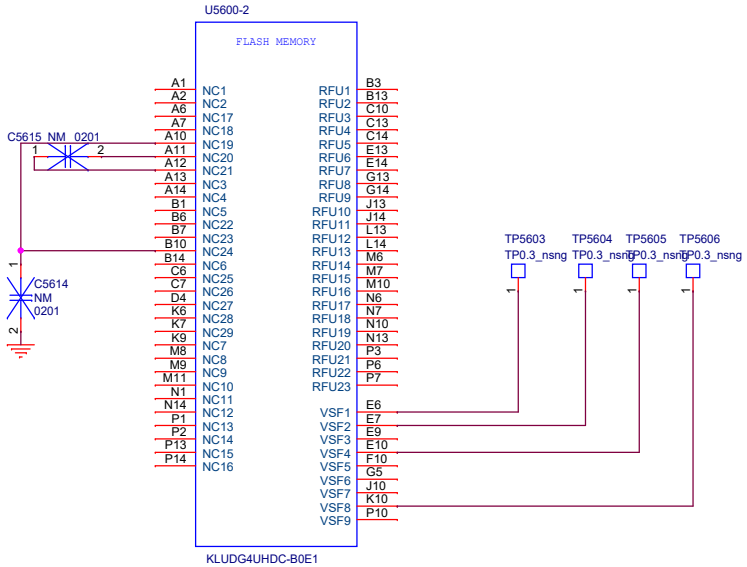

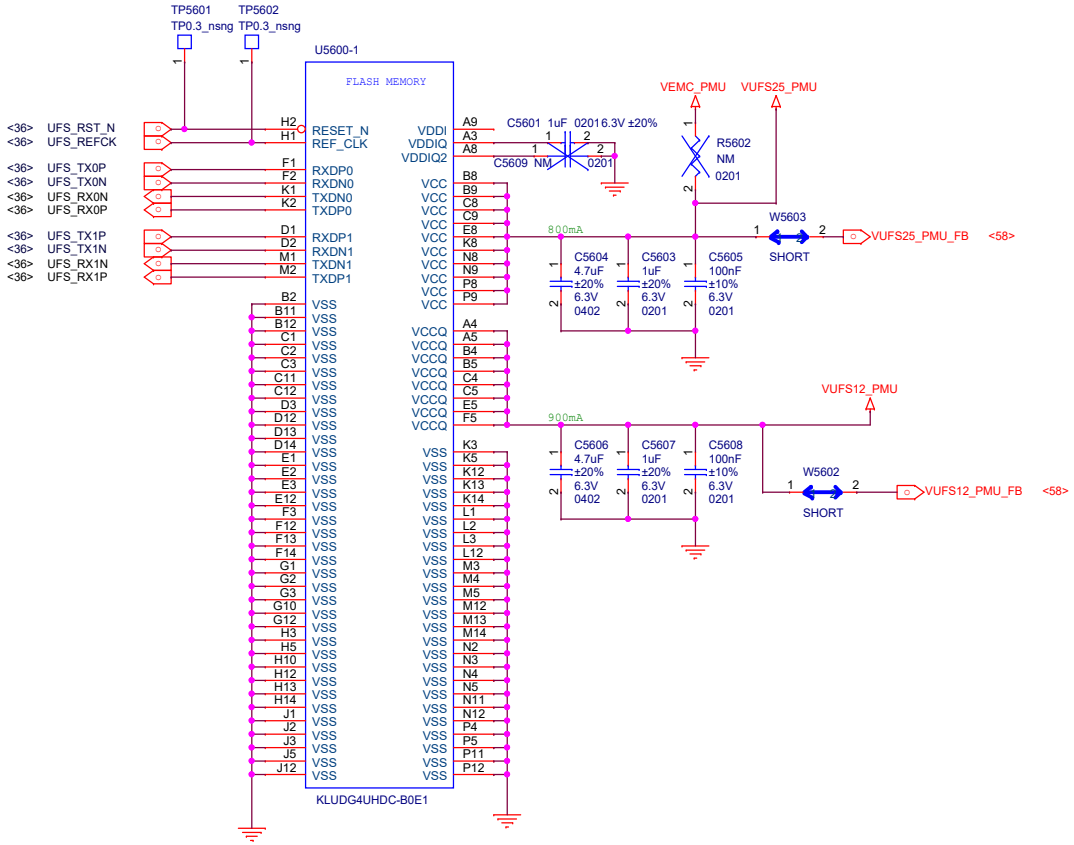

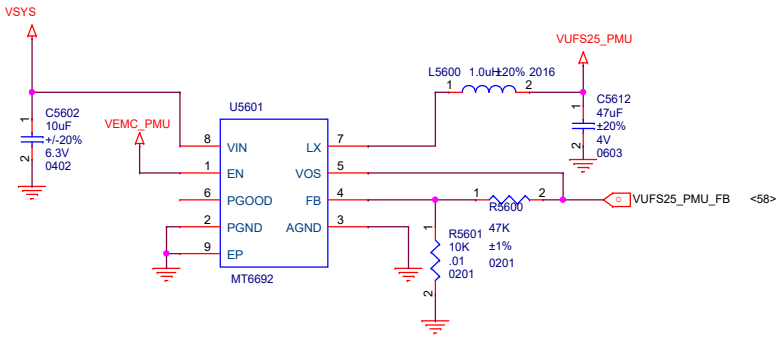

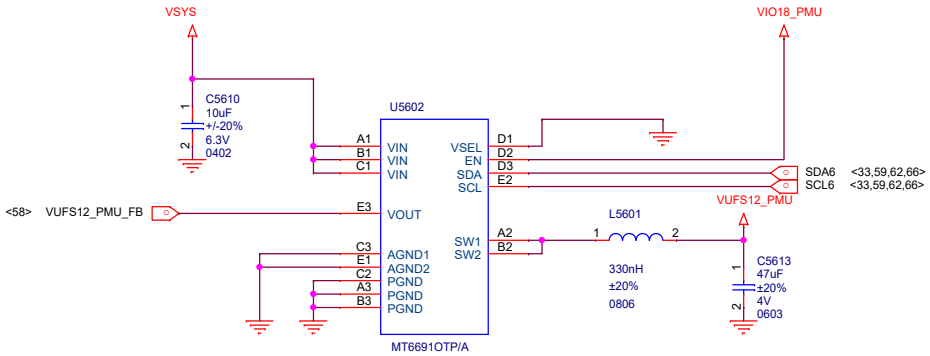

Title	Memory_1
Size A3	Document Number MEMORY
Date:	Monday, March 22, 2021

LP4X DRAM: VMDDR

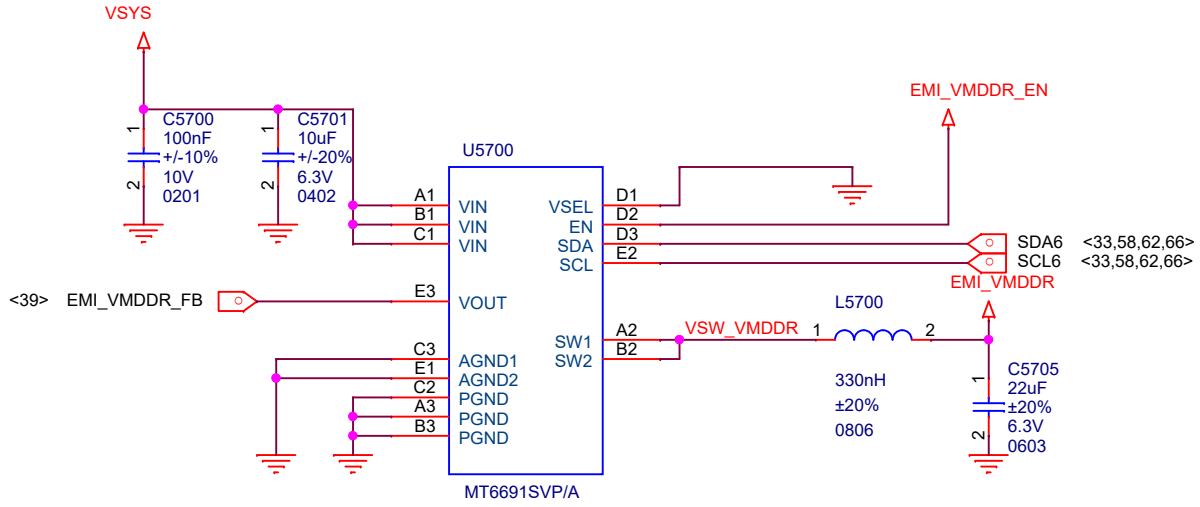

LP4X DRAM: VDD1

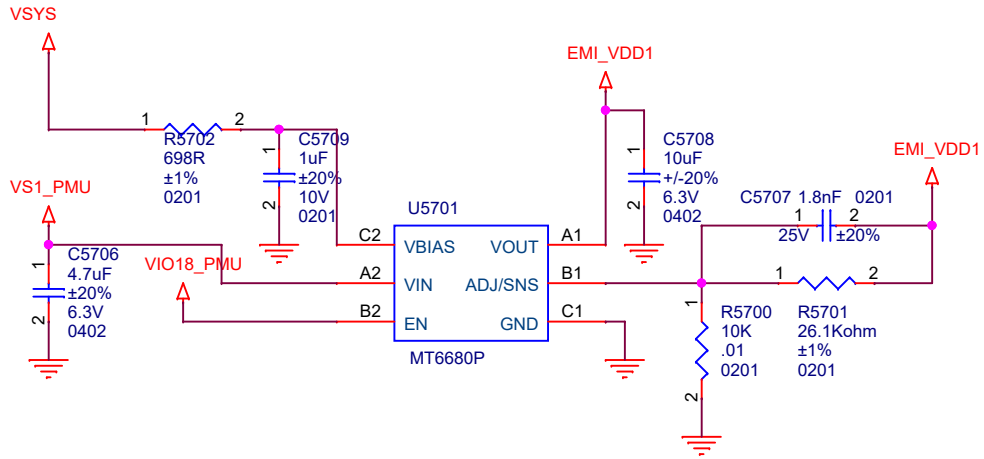

Title	
Size A4	Document Number Memory_2
Date: Monday, March 22, 2021	

Title	MT6873_5GA
Size A3	Document Number Reserved(for WCD)
Date:	Monday, March 22, 2021

Title	MT6873_5GA
Size A3	Document Number Reserved(for WCD)
Date:	Monday, March 22, 2021

SPK

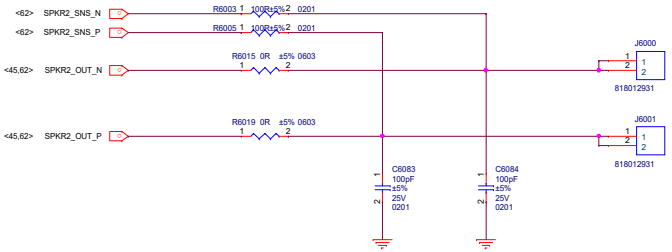

Earphone Microphone

Close to PMIC

Close to audio jack

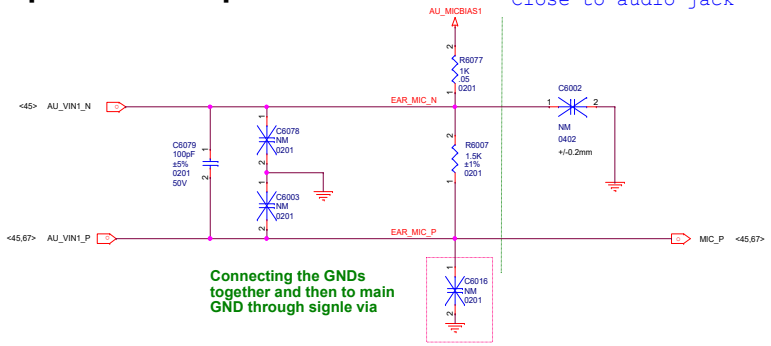

SPKR PA

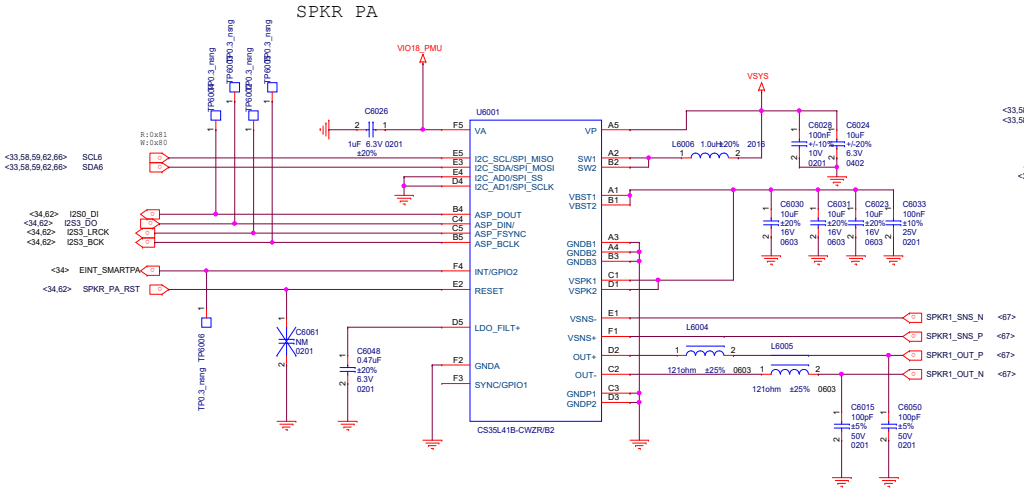

SPK2 PA

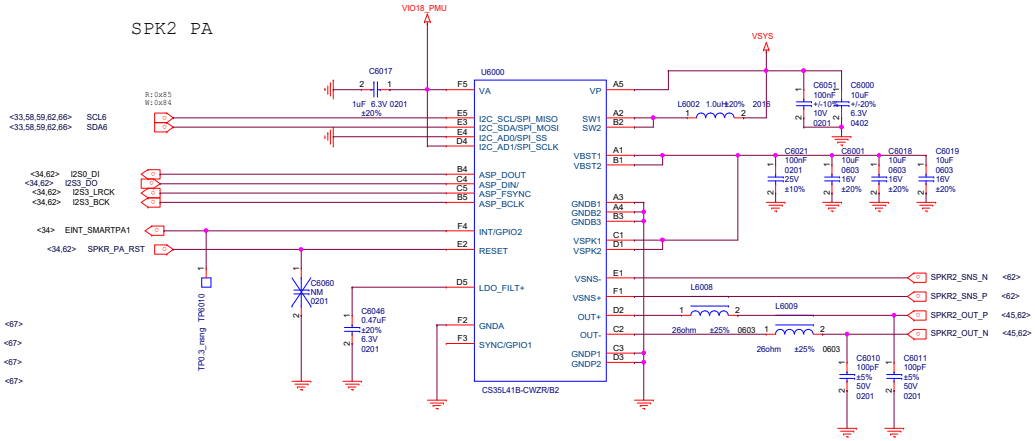

Second MIC

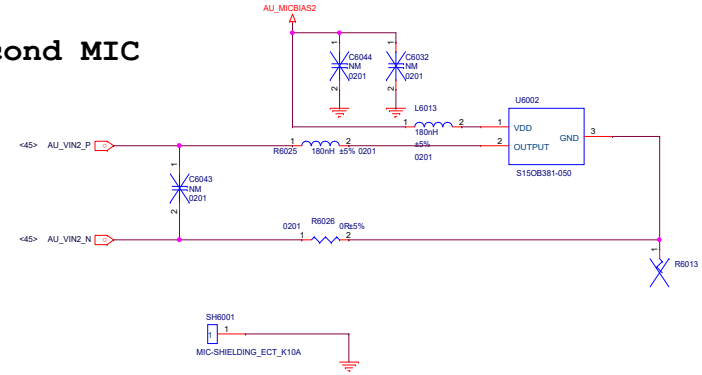

A+G1

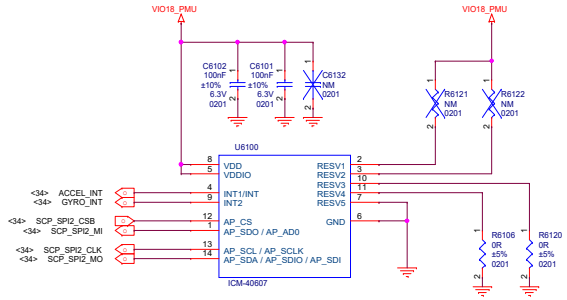

Sidekey

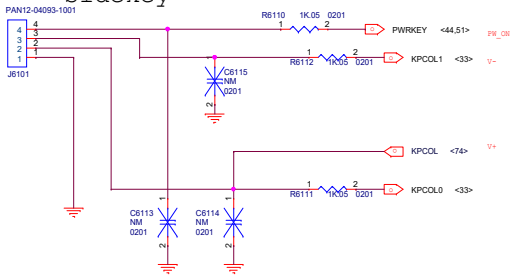

RAMDUMP debug key

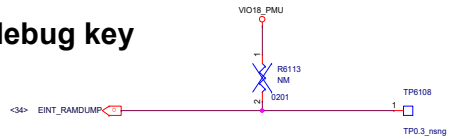

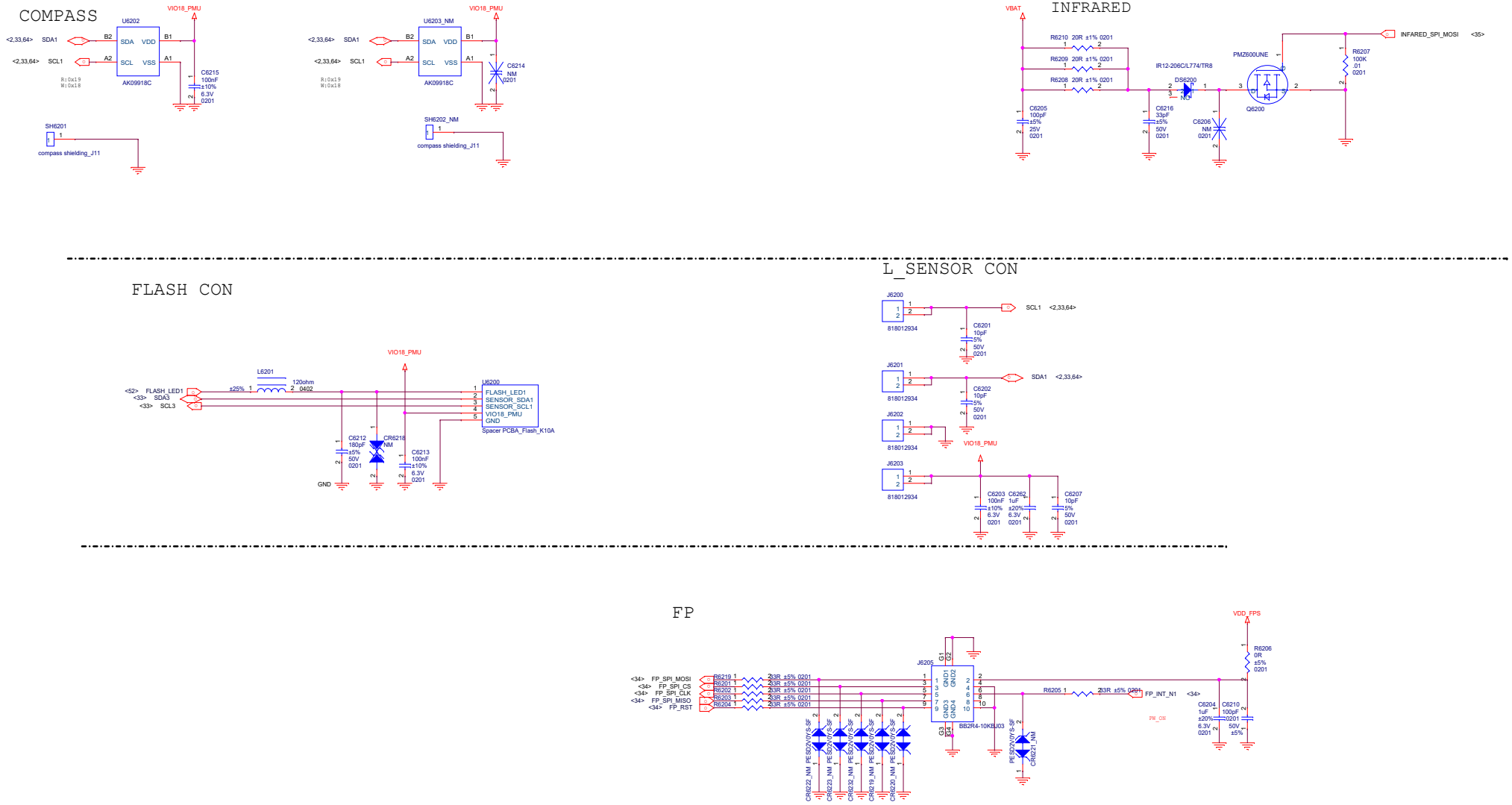
COMPASS
U6202
VIO18_PMU
<2,33,64> SDA1
<2,33,64> SCL1
B2
A2
SDA
SCL
VDD
VSS
B1
A1
AK09918C
R:0x19
W:0x18
C6215
100nF
±10%
6.3V
0201
SH6201
compass shielding_J11
U6203_NM
C6214
NM
0201
SH6202_NM
compass shielding_J11
INFRARED
VBAT
R6210 20R ±1% 0201
R6209 20R ±1% 0201
R6208 20R ±1% 0201
C6205
100pF
±5%
25V
0201
IR12-206C/L774/TR8
DS6200
NM
C6216
33pF
±5%
50V
0201
C6206
NM
0201
PMZ600UNE
Q6200
R6207
100K
.01
0201
INFRARED_SPI_MOSI
<35>
FLASH CON
VIO18_PMU
L6201
120ohm
0402
±25%
<52> FLASH_LED1
<33> SDA3
<33> SCL3
U6200
FLASH_LED1
SENSOR_SDA1
SENSOR_SCL1
VIO18_PMU
GND
Spacer PCBA_Flash_K10A
C6212
180pF
±5%
50V
0201
CR6218
NM
C6213
100nF
±10%
6.3V
0201
GND
L_SENSOR CON
J6200
SCL1 <2,33,64>
C6201
10pF
±5%
50V
0201
J6201
SDA1 <2,33,64>
C6202
10pF
±5%
50V
0201
J6202
VIO18_PMU
J6203
818012934
C6203
100nF
±10%
6.3V
0201
C6262
1uF
±20%
6.3V
0201
C6207
10pF
±5%
50V
0201
FP
VDD_FPS
<34> FP_SPI_MOSI
<34> FP_SPI_CS
<34> FP_SPI_CLK
<34> FP_SPI_MISO
<34> FP_RST
R6219 1
R6201 1
R6202 1
R6203 1
R6204 1
23R ±5% 0201
J6205
BB2R4-10KBJ03
R6205 1
23R ±5% 0201
FP_INT_N1
<34>
PM_ON
R6206
0R
±5%
0201
C6204
1uF
±20%
6.3V
0201
C6210
100pF
0201
50V
±5%
PESD2V0Y5-SF
CR622_NM
CR622_NM
CR623_NM
CR632_NM
CR619_NM
CR620_NM

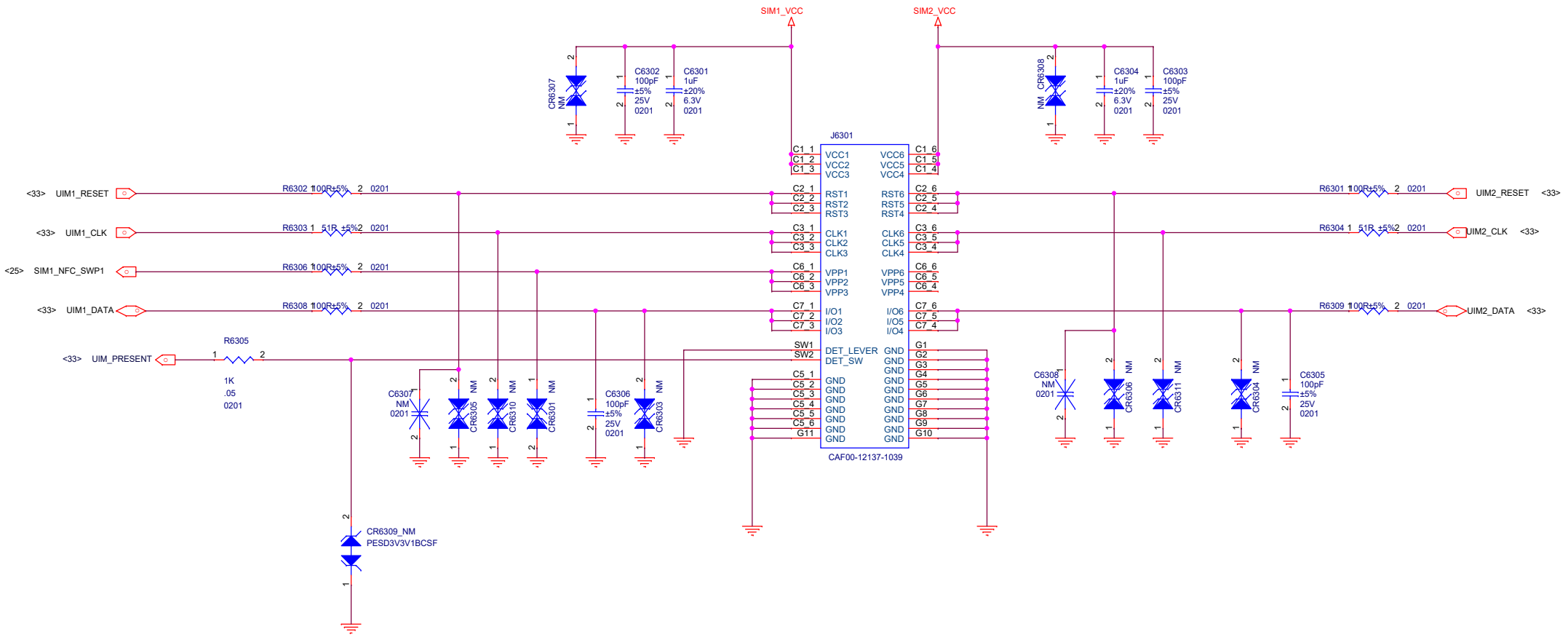

Title	MT6873_5GA
Size A3	Document Number SIM CONNECTOR
Date:	

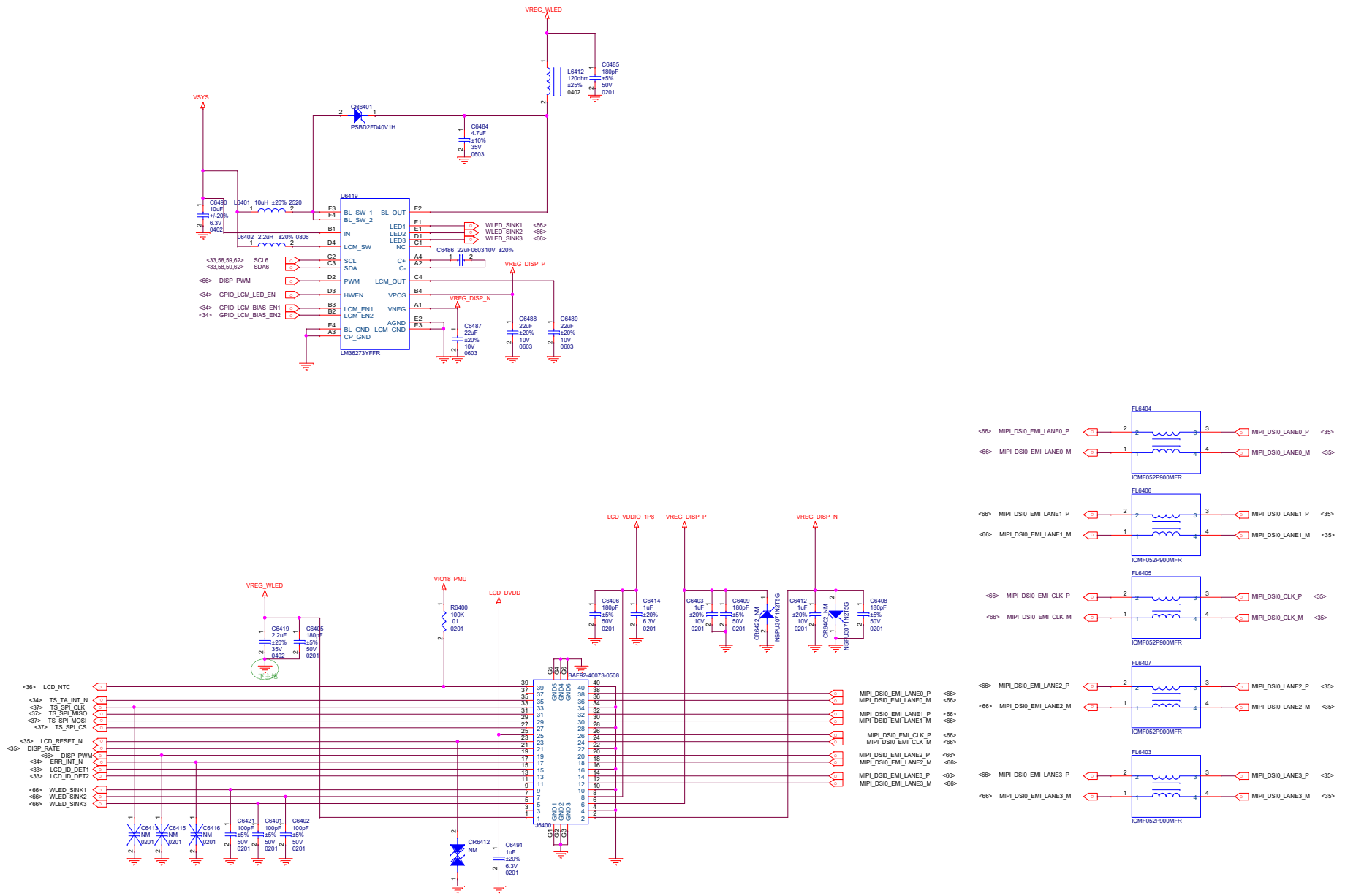
VREG_WLED
L6412
120ohm
±25%
0402
C6485
180pF
±5%
50V
0201
VSYS
CR6401
PSBD2FD40V1H
C6484
4.7uF
±10%
35V
0603
C6480
10uF
+/-20%
6.3V
0402
L6401 10uH ±20% 2520
L6402 2.2uH ±20% 0806
U6419
LM36273YFFR
BL_SW_1
BL_SW_2
IN
LCM_SW
SCL
SDA
PWM
HWEN
LCM_EN1
LCM_EN2
BL_GND
CP_GND
BL_OUT
LED1
LED2
LED3
NC
C+
C-
LCM_OUT
VPOS
VNEG
AGND
LCM_GND
WLED_SINK1 <66>
WLED_SINK2 <66>
WLED_SINK3 <66>
C6486 22uF 0603 10V ±20%
VREG_DISP_P
VREG_DISP_N
<33,58,59,62> SCL6
<33,58,59,62> SDA6
<66> DISP_PWM
<34> GPIO_LCM_LED_EN
<34> GPIO_LCM_BIAS_EN1
<34> GPIO_LCM_BIAS_EN2
C6487
22uF
±20%
10V
0603
C6488
22uF
±20%
10V
0603
C6489
22uF
±20%
10V
0603
FL6404
ICMF052P900MFR
<66> MIPI_DSI0_EMI_LANE0_P
<66> MIPI_DSI0_EMI_LANE0_M
MIPI_DSI0_LANE0_P <35>
MIPI_DSI0_LANE0_M <35>
FL6406
<66> MIPI_DSI0_EMI_LANE1_P
<66> MIPI_DSI0_EMI_LANE1_M
MIPI_DSI0_LANE1_P <35>
MIPI_DSI0_LANE1_M <35>
FL6405
<66> MIPI_DSI0_EMI_CLK_P
<66> MIPI_DSI0_EMI_CLK_M
MIPI_DSI0_CLK_P <35>
MIPI_DSI0_CLK_M <35>
FL6407
<66> MIPI_DSI0_EMI_LANE2_P
<66> MIPI_DSI0_EMI_LANE2_M
MIPI_DSI0_LANE2_P <35>
MIPI_DSI0_LANE2_M <35>
FL6403
<66> MIPI_DSI0_EMI_LANE3_P
<66> MIPI_DSI0_EMI_LANE3_M
MIPI_DSI0_LANE3_P <35>
MIPI_DSI0_LANE3_M <35>
LCD_VDDIO_1P8
VREG_DISP_P
VREG_DISP_N
C6406
180pF
±5%
50V
0201
C6414
1uF
±20%
6.3V
0201
C6403
1uF
±20%
10V
0201
C6409
180pF
±5%
50V
0201
CR6423
NM
NSPU307/NZ15G
C6412
1uF
±20%
10V
0201
CR6402
NM
NSPU307/NZ15G
C6408
180pF
±5%
50V
0201
VREG_WLED
C6419
2.2uF
±20%
35V
0402
C6405
180pF
±5%
50V
0201
下主板
VIO18_PMU
R6400
100K
.01
0201
LCD_DVDD
BAF82-40073-0508
J6400
<36> LCD_NTC
<34> TS_TA_INT_N
<37> TS_SPI_CLK
<37> TS_SPI_MISO
<37> TS_SPI_MOSI
<37> TS_SPI_CS
<35> LCD_RESET_N
<35> DISP_RATE
<66> DISP_PWM
<34> ERR_INT_N
<33> LCD_ID_DET1
<33> LCD_ID_DET2
<66> WLED_SINK1
<66> WLED_SINK2
<66> WLED_SINK3
MIPI_DSI0_EMI_LANE0_P <66>
MIPI_DSI0_EMI_LANE0_M <66>
MIPI_DSI0_EMI_LANE1_P <66>
MIPI_DSI0_EMI_LANE1_M <66>
MIPI_DSI0_EMI_CLK_P <66>
MIPI_DSI0_EMI_CLK_M <66>
MIPI_DSI0_EMI_LANE2_P <66>
MIPI_DSI0_EMI_LANE2_M <66>
MIPI_DSI0_EMI_LANE3_P <66>
MIPI_DSI0_EMI_LANE3_M <66>
C6413
NM
0201
C6415
NM
0201
C6416
NM
0201
C6421
100pF
±5%
50V
0201
C6401
100pF
±5%
50V
0201
C6402
100pF
±5%
50V
0201
CR6412
NM
C6491
1uF
±20%
6.3V
0201

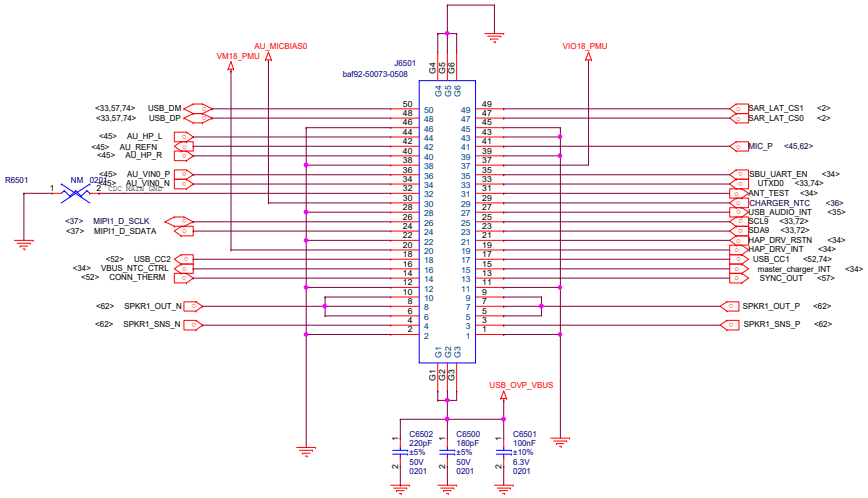
J6501
baf92-50073-0508
VM18_PMU
AU_MICBIAS0
VIO18_PMU
USB_OVP_VBUS
<33,57,74> USB_DM
<33,57,74> USB_DP
<45> AU_HP_L
<45> AU_REFN
<45> AU_HP_R
<45> AU_VIN0_P
<45> AU_VIN0_N
R6501
NM_0201
<37> MIPI1_D_SCLK
<37> MIPI1_D_SDATA
<52> USB_CC2
<34> VBUS_NTC_CTRL
<52> CONN_THERM
<62> SPKR1_OUT_N
<62> SPKR1_SNS_N
SAR_LAT_CS1 <2>
SAR_LAT_CS0 <2>
MIC_P <45,62>
SBU_UART_EN <34>
UTXD0 <33,74>
ANT_TEST <34>
CHARGER_NTC <36>
USB_AUDIO_INT <35>
SCL9 <33,72>
SDA9 <33,72>
HAP_DRV_RSTN <34>
HAP_DRV_INT <34>
USB_CC1 <52,74>
master_charger_INT <34>
SYNC_OUT <57>
SPKR1_OUT_P <62>
SPKR1_SNS_P <62>
C6502
220pF
±5%
50V
0201
C6500
180pF
±5%
50V
0201
C6501
100nF
±10%
6.3V
0201

WIDE 64M IMX686

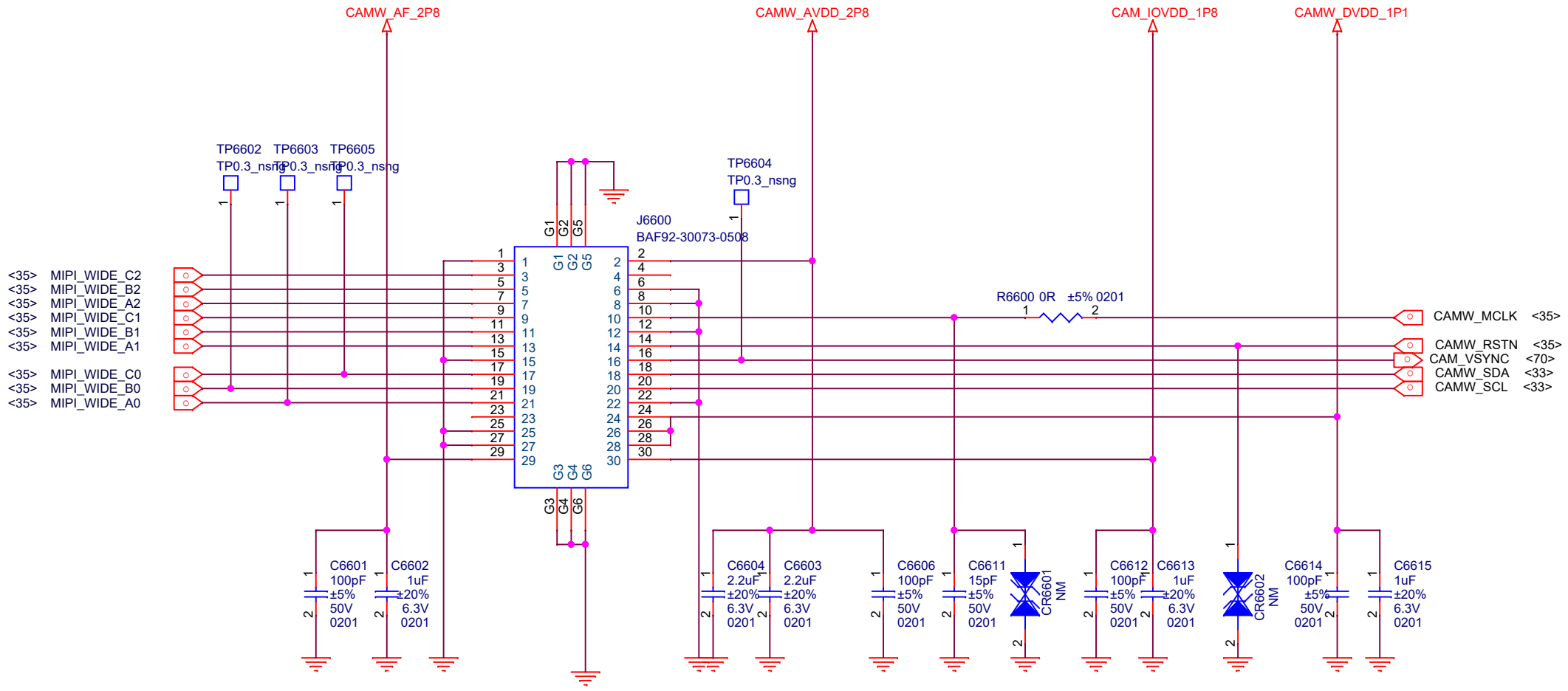

Title	J11 MAIN
Size A4	Document Number WIDE&TELE CAMERA
Date:	Monday, March 22, 2021

front 16M S5K3T2

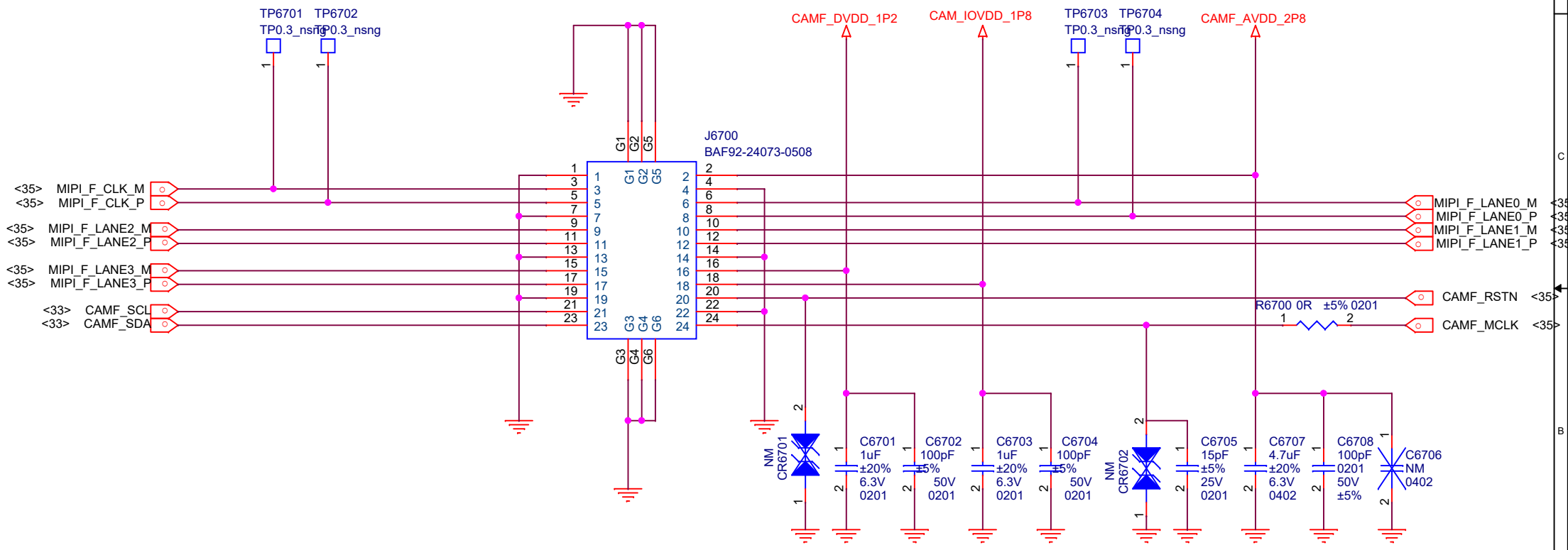

Title	J11 MAIN
Size A4	Document Number Reserved(for Analog FM)
Date:	Monday, March 22, 2021

ULTRA 8M IMX355

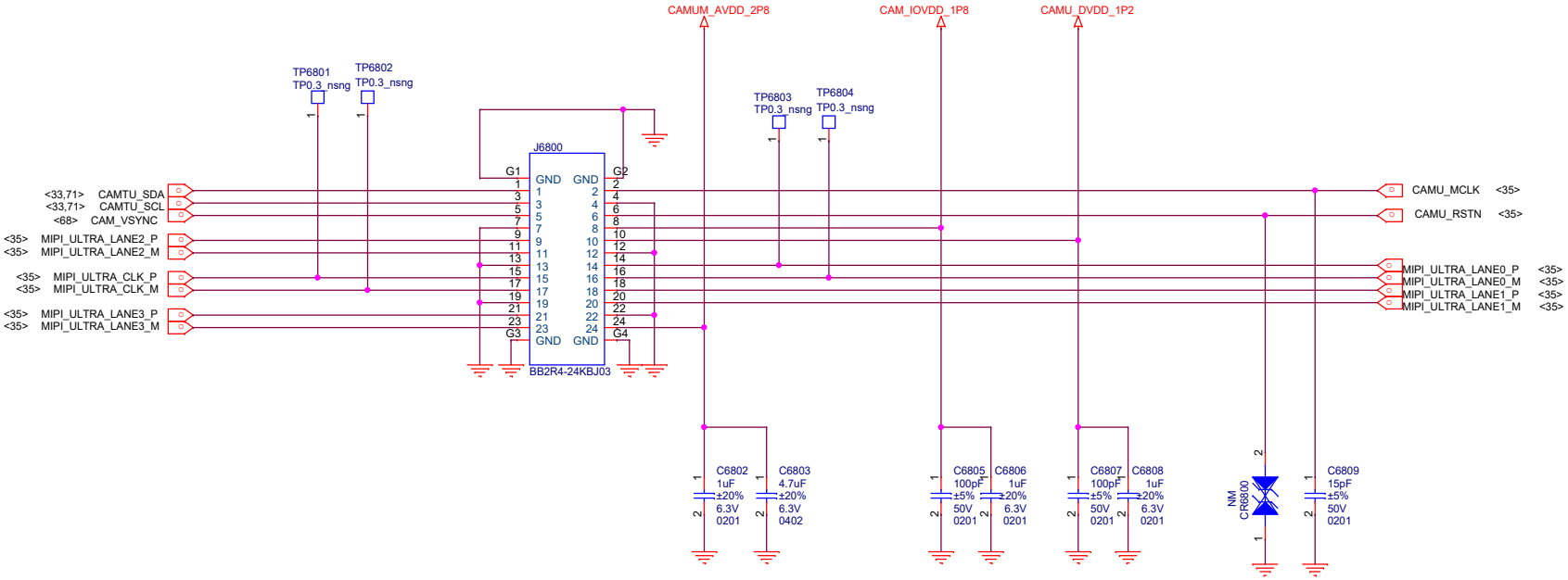

Title	J11 MAIN
Size A3	Document Number ULTRA CAMERA
Date:	Monday, March 22, 2021

MACRO 2M

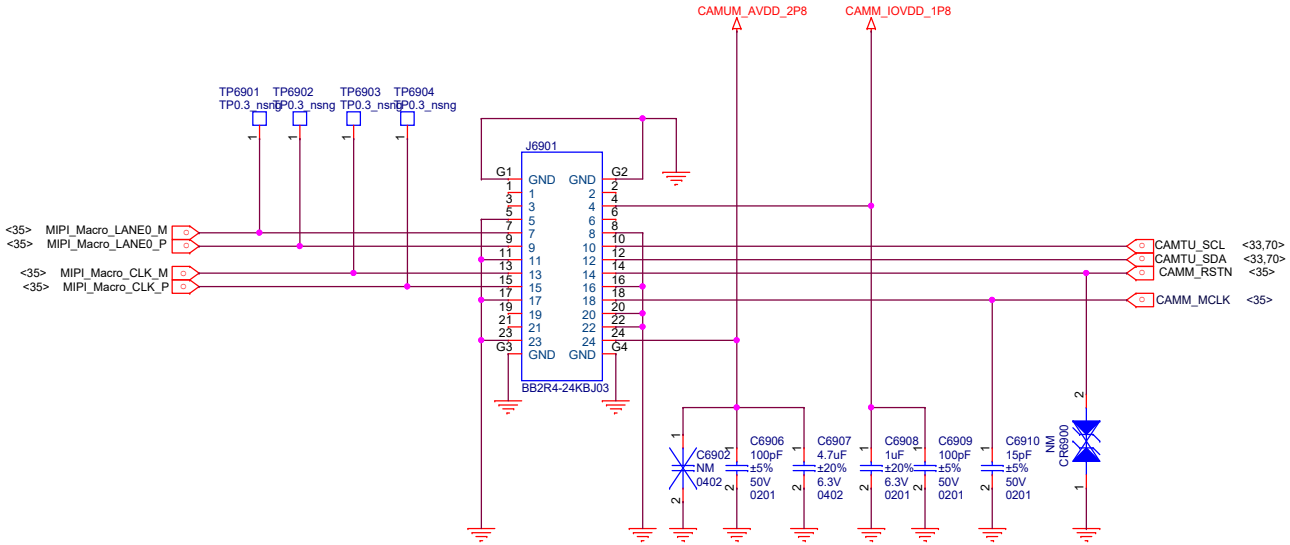

Title	J11 MAIN
Size A3	Document Number ULTRA CAMERA
Date:	Monday, March 22, 2021

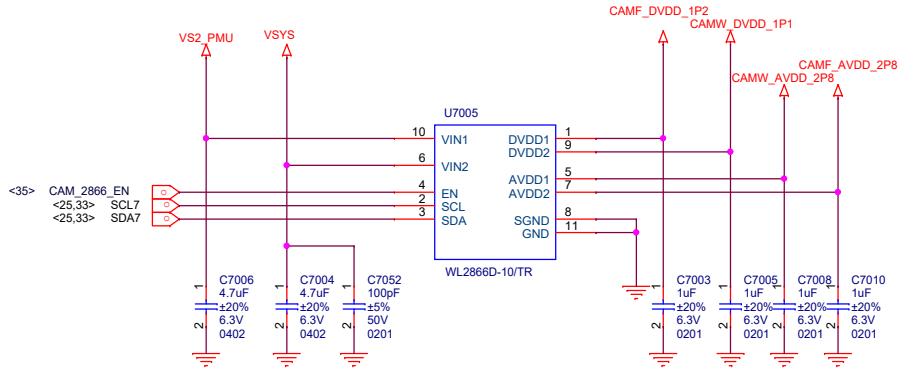

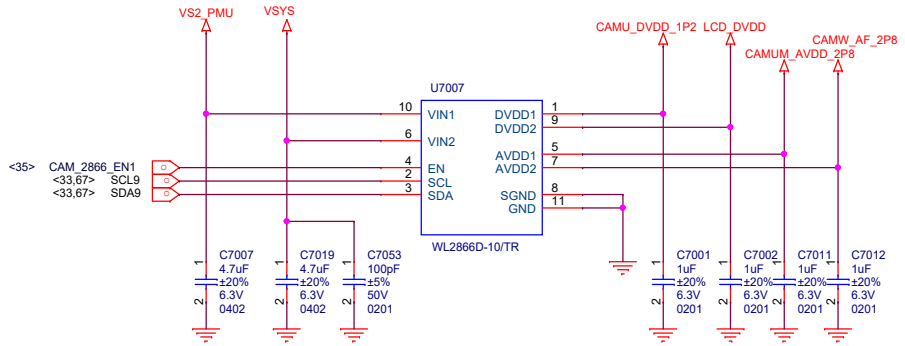

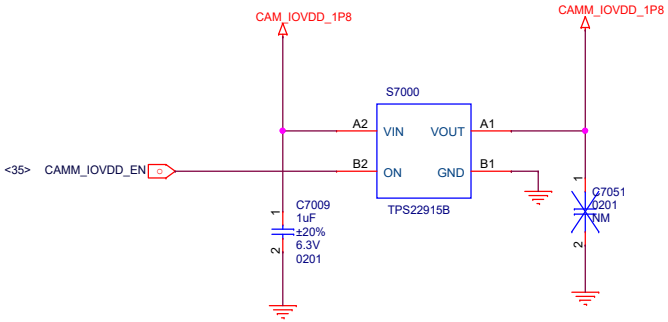

Title	<Title>
Size A3	Document Number <Doc>
Date:	Monday, March 22, 2021

Title	J11 MAIN
Size B	Document Number SIM
Date:	Monday, March 22, 2021

Schematic design notice of "90_DEBUG_IO" page.

Note 90-1: UART Default support : UART0,
JTAG Default support : AP JTAG/MD_IO_JTAG

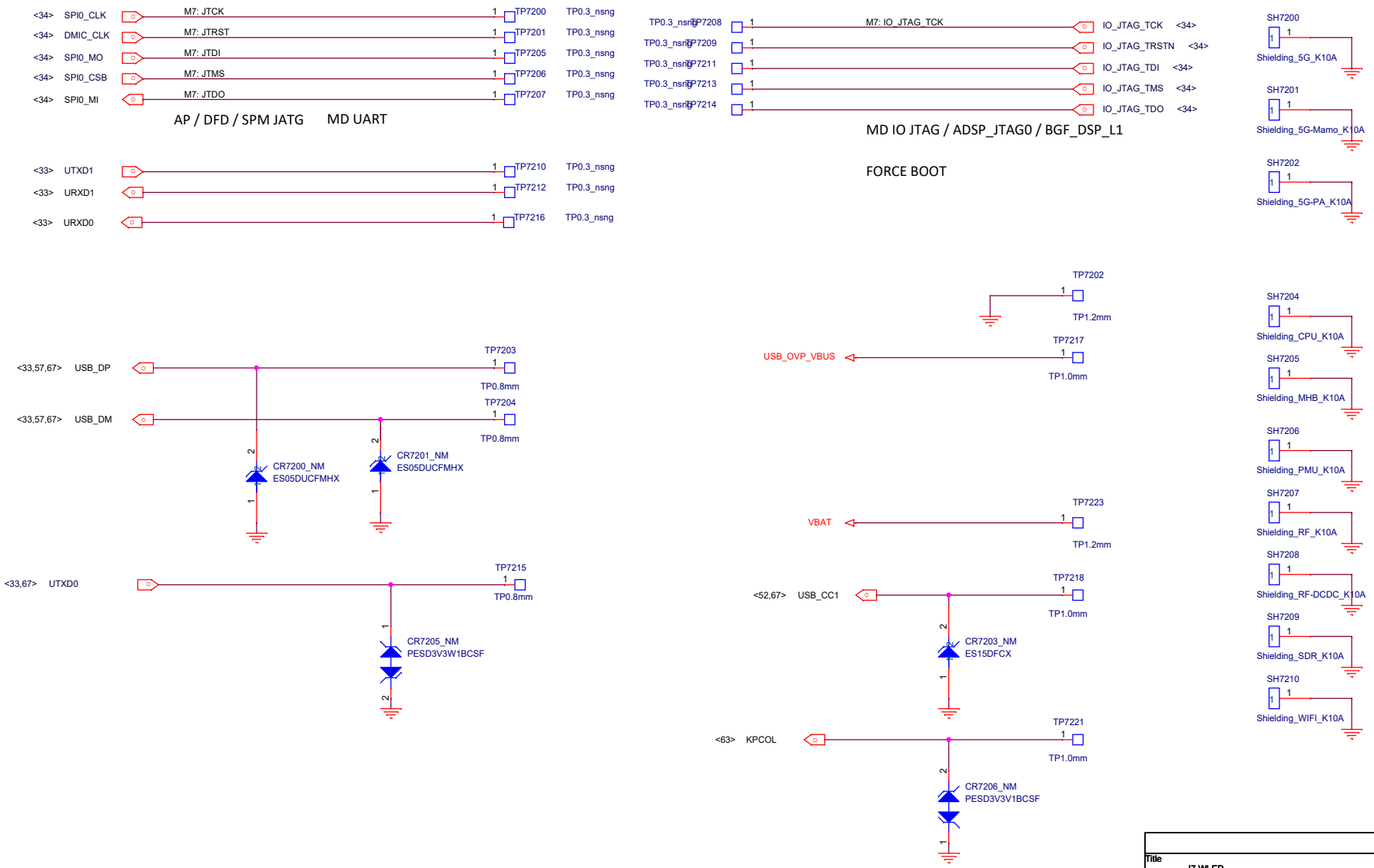

Title	J7 WLED
Size A3	Document Number <Doc>
Date:	Monday, March 22, 2021

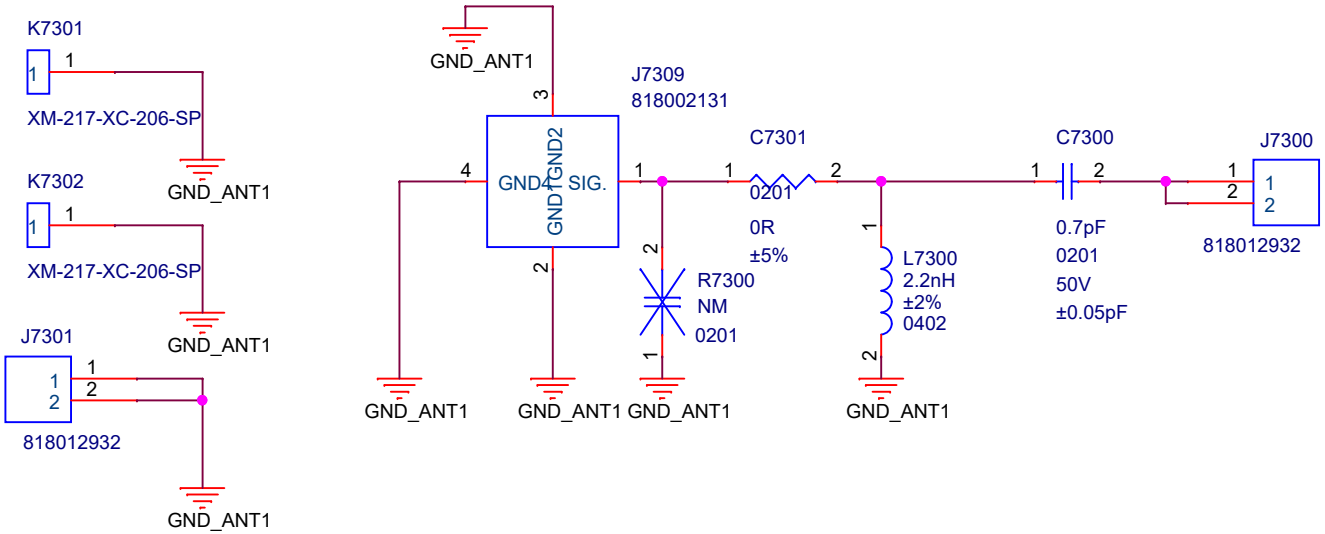

Title	<Title>	
Size A	Document Number <Doc>	
Date: Monday, March 22, 2021		Sheet